DOCUMENT DATA FORM **Your Name: Nick Carino**

Document Title or Description (max. 254 characters): Circle: Same as cover (or fill in below)
Correspondence, updated floor truss designs.

Include work order no. and floor no. if applicable

Roll #: RD-4	**Doc. ID (report #, dwg. #):**	
Document Date: 1967	**Document Author Name:**	**Author Organization:** Laclede Steel Co.

KEYWORDS – HIGHLIGHT ALL THAT APPLY

Level 1

Bankers Trust	Project 6	WTC 4 - South Plaza Bldg.
Concourse	Project 7	WTC 5 - North Plaza Bldg.
Electrical Substation	Project 8	WTC 6 - Customs House
Liberty Plaza	WFC 1 - Oppenhiemer Dow	WTC 7
PATH Station	WFC 2 - Tower B	WTC Complex
Project 1	WFC 3 - American Express	WTC Plaza
Project 2	WFC 4 - Tower D	
Project 3	WTC 1 - North Tower	Add
Project 4	WTC 2 - South Tower	
Project 5	WTC 3 - Marriot Hotel	

Level 2

Accident analysis & risk	Fire protection	Police	Add
Architectural	Fire service	Security	
Data request	Management	Structural	
Emergency management	Mech./elec.	Tenant alterations	
Evacuation	News coverage		

Level 3

1993 explosion	Deflection	Human comfort	Smoke control
A/E fitout	Demolition	HVAC	Smoke test
A-242	Design	Index	Spandrel beam
A-36	Detailing	Inspection	Specifications Splices
A-497	Doors	Insulation	Sprinkler
Air cooled condensers	Drawings	Job number	Stability
Analysis	Eastern States Steel	Joist	Stairways
Angles	Egress	L-50	Standards
Antenna	Elevator	Lighting	Steel
Artifacts	Emergency communications	Loads	Steel composition
Asbestos	Equipment	Maintenance	Stiffness
Beams	Erection marks	Marking	Structural review
Bow tie	Escalator	Mesh reinforcement	Survivor
Bracing	Expansion joint	Mill inspection	Tenant list
Bridging truss	Exterior columns	Model	Testing
Calculations	Fabrication	Mullion	Tie
Carpet	Family member	Operations	Tolerances
Ceilings	Field survey	Paint	Triad
Certification	Fire alarms	Partition layout	Truss
Chillers	Fireproofing	Photos	Vestibule
Cladding	Fire spread	Pipes	Vibration
Collapse	Flammability	Plumbing	Walls
Columns	Floor	Probability, uncertainty	Water supply
Communication systems	Floor load	Quality control	Weather
Composite truss	Floor slab	Reinforcing (strengthening)	Weight
Computer output	Floor system	Renovation	Weld detail
Computer program	Floor trusses	Repair	Weld size
Concrete	Foundations	Research & Development	Welding
Connections	Fracture	Roof	Wind
Construction	Frame	Safety	Windows
Contract	Frame analysis	Schedule	Yield strength
Core beams	Frequency	Sculpture	
Core columns	Fuel	Security system	Add
Cranes	Furniture layout	Shear knuckle	
Criteria	H Generators	Shear test	
Dampers	Guidelines	Shop drawings	
Debris	Gypsum board	Shortening	
Deck	Hat truss	Slurry wall	

WTCI-733-LERA

LACLEDE '67

LACLEDE STEEL COMPANY

Mr. Joe Solomon
Emery Roth & Sons   Page 2   February 24, 1967

Under separate cover you are receiving ~~six~~ 7 sepias ~~and six prints~~ for each of the "ST" details listed as follows

Revised detail ST-107 replaces detail submitted 2/10/67
Revised sheet L-101 replaced L-101 submitted 2/10/67

The revisions on these two sheets are minor marks of identification and in no way affect the geometric configuration of the structural members used to guide the designers of mechanical and electrical facilities.

The remainder of the [illegible] details forthcoming under separate cover are:

ST-105	ST-106i
ST-106	ST-106F
ST-106A	ST-109
ST-106B	ST-110
ST-106C	

Detail L-100 is also included to complete the list of details necessary to cover the range of truss members incorporated in the floor grids.

We would appreciate your acknowledgement of receipt of these details so that we may keep our records up to date.

Yours very truly,

A. Carl Weber
Vice President
Research & Engineering

ACW:pp

Enclosures

cc: Mr. Wayne Brewer
Worthington, Skilling,
Helle & Jackson

Mr. Malcolm Levy
Port of New York Authority

Mr. Lester Feld
Port of New York Authority

Laclede Steel Company

General Offices: Arcade Building

St. Louis, Missouri 63101 February 24, 1967

Mr. Joe Solomon
Project Manager
Emery Roth & Sons
850 Third Avenue
New York, New York 10022

Dear Mr. Solomon:

Laclede Steel Company Structural Details
World Trade Center Towers

Enclosed herewith is a loose-leaf folder including the following material relative to all structural details required for the trusses and incidental structural items for the floor grids on the World Trade Center:

Index sheets covering structural details ("ST" drawings and "L" drawings).

Design sheets covering configuration and sizing of truss members.

Detail sheets.

D101 replaces D1 (submitted previously)
D102 replaces D2
D103 replaces D3 (submitted previously)
D105-T-1 showing design data for truss marked 20371
D105-T-5 showing design data for truss marked 20375

As explained in the design data material, all trusses are evaluated on the basis of the most critical sections identified by numbers 1 [illegible] 8 inclusive on the design details and standards.

The remainder of the complete data sheets for All trusses as marked in the index will be forthcoming shortly to complete all structural data on hand. The T-1 and T-5 trusses are the basic trusses in the design, and the check and approval of them will establish the values applicable on all other structural elements identified.

LACLEDE STEEL COMPANY D105- T 5 -Sheet 2

WORLD TRADE CENTER
FLOOR GRID TRUSSES
DESIGN DATA

TRUSS UNIT MARKED 2C32T5 Refer to drawings ST 101,6,8 .

Clearspan "L" = 54.83 ft. Spacing = 6.67 ft.

Applicable Total Moment = 1,920,000 inch pounds.

Based on 154 lbs./sq. ft. Total Load "w". [31' Partial Loading]

Applicable End Reaction = 18,500 pounds.

Based on 154 lbs./sq. ft. Total Load "w".

Applicable Total Constr. Moment = 585,000 inch pounds.

Based on 46 lbs./sq. ft. Construction Load.

Applicable Constr. End Reaction = 5470 pounds.

Based on 46 lbs./sq. ft. Construction Load.

"V" Shear at End Panel = 14,920 pounds. ED = 3.0 ft.

WEB MEMBER #1 Distance from End Panel = 0.0 ft.

Applicable Shear V_x = 14,920 lbs. f_y = 50,000 psi

Slope = 2.65 f_s = 30,000 psi

ℓ = —— in. f_{sc} = —— psi

Reqd. Area = 1.32 sq. in. Use [illegible] Area = —— sq. in.

WEB MEMBER #2 Distance from End Panel = 0.0 ft.

Applicable Shear V_x = 14,920 lbs. f_y = 36,000 psi

Slope = 1.00 f_s = —— psi

ℓ = 26.0 in. f_{sc} = 11,200 psi

Reqd. Area = 1.33 sq. in. Use 2-0.92" dia Area = 1.33 sq. in.

WEB MEMBER #3 Distance from End Panel = 4.87 ft.

Applicable Shear V_x = 9,920 lbs. f_y = 36,000 psi

Slope = 1.162 f_s = —— psi

ℓ = 30.0 in. f_{sc} = 8,760 psi

Reqd. Area = 1.32 sq. in. Use 2-0.92" dia Area = 1.33 sq. in.

WEB MEMBER #4 Distance from End Panel = 3.21 ft. (GO = 2.00')

Applicable Shear V_x = 12,570 lbs. f_y = 50,000 psi

Slope = 1.162 f_s = — psi

l = 30.0 in. f_{sc} = 9,970 psi

Reqd. Area = 1.47 sq. in. Use 2-0.98" DIA Area = 1.51 sq. in.

WEB MEMBER #5 Distance from End Panel = 0.0 ft. (GP = 2.00')

Applicable Shear V_x = 15,865 lbs. f_y = 50,000 psi

Slope = 1.90 f_s = 30,000 psi

l = — in. f_{sc} = — psi

Reqd. Area = 1.01 sq. in. Use 2-0.92" DIA Area = 1.33 sq. in.

CHORD MEMBER #6 Consists of 4 - 2" x 1½" x 0.25" Angles

Construction Load Design Area = 3.60 sq. in.

Applicable Moment = 585,000 in. lbs. f_y = 50,000 psi

l = 35.375 in. f_s = — psi

r_x = 0.44 in. f_{sc} = 12,930 psi

r_z = 0.31 in. ~~(with fillers in middle 60% of span)~~

$\frac{l}{r_x}$ = 75.8

$\frac{l}{2r_z}$ = 107.5 $\frac{f_a}{F_a} + \frac{f_b C_m}{F_b(1 - \frac{f_a}{F'_e})}$ = 0.477 less than 1

f_a = 5,800 psi

F_a = 12,930 psi

f_b = 748 psi

F_b = 30,000 psi

F'_e = 25,950 psi

Use 4 - 2" x 1½" x 0.25" X's Area = 3.60 sq. in.

CHORD MEMBER #7 Consists of 4 - 2" x 1½" x 0.25" Angles

Total Load Design Area = 3.60 sq. in.

CHORD MEMBER #7 (CONTD.)

Applicable Moment = 1,920,000 in lbs. f_y = 36,000 psi

f_s = 22,000 psi

D_t = 33.00 in. f_{sc} = — psi

B_{eff} = 64.00 in.

t = 4.00 in.

y_1 = 2.00 in. d_2 = 2.44 in.

y_2 = 4.44 in. d_3 = 25.66 in.

y_3 = 32.56 in. c_1 = 6.90 in.

d_1 = 4.90 in. c_2 = 26.10 in.

$$I_s = \sum [(I_c + A_c d_1^2) + (I_{TCA} + A_{TCA} d_2^2) + I_{BCA} + A_{BCA} d_3]$$

$$\bar{y} = \frac{\sum (A_c y_1 + A_{TCA} y_2 + A_{BCA} y_3)}{\sum (A_c + A_{TCA} + A_{BCA})}$$

$\bar{y}$ = 6.90 in.

I_s = 2826 $in.^4$ (2C32T5)

Resisting Moment = $f_s \times \frac{I_s}{c_2}$ = 2,380,000 in. lbs.

Use 4 - 2" x 1½" x 0.25" ∠'s Area = 3.60 sq. in.

Composite Design Top Chord Check

Total Load Design f_c = 3,000 psi

Applicable Moment = 1,920,000 in. lbs. f'_c = 1,350 psi

$$f'_{cc} = \frac{M c_1}{15 I_s} = 312 \text{ psi}$$

CHORD MEMBER #8 Consists of 4 - 2" x 1½" x 0.25" Angles

Area = 3.60 sq. in.

(SAME AS MEMBER 6)

LACLEDE STEEL COMPANY D105- T 6 -Sheet 1

WORLD TRADE CENTER
FLOOR GRID TRUSSES
DESIGN DATA

Truss Mk. 2 C32T6-358

Truss Component Mk. C32T6

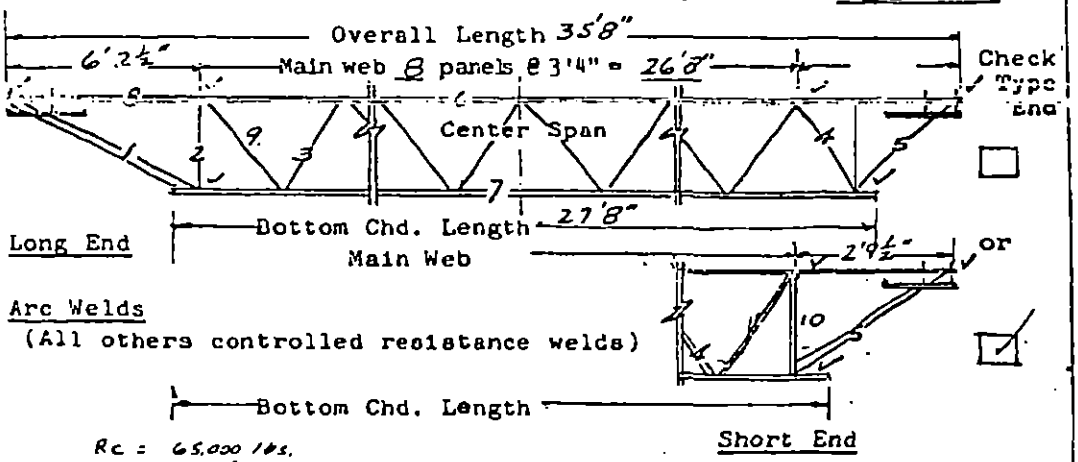

Rc = 65,000 lbs.
$W_c = \frac{R_c}{L} = 3,640$ lbs.

Rw = 32,000 lbs.
$W_w = \frac{R_w}{L} = 1,790$ lbs.

NOTES:

Main Web - Continuous uniform section throughout Member Mk. 3. (Top chord fillers same section as Main Web - at midpoint 6 center web panels minimum.)

Vertical Struts Mk. 2 - Same size as main web.

End Bearing Struts - Same size as main web.

Composite Type - Webs extend above top chord 3".

MEMBERS REQUIRED PER TRUSS COMPONENT S____ or C✓

Member	Mk.No.	Grade of Steel	Size	Total Length Member	Weight Member
Top Chord	6-8	A-441	2 L 2"x1½"x.31"	35'8"	
Bottom Chord	7	A-36	2 L 3"x2"x.37"	27'8"	
Main Web	3	A-441	1.14"D	48'9"	
Compression Web	4	A-441	2 - 1.14"D	3'1"	
Vertical End Struts	2	A-441	1.14"D	2'7½"	
Long End Diagonal	1	A-441	1.14"D + .75"D	6'6"-6'4"	
Short End Diagonal	5	A-441	1.14"D + .75"D	3'6"-3'4"	
Short End Vertical	10	A-441	2 - 1.14"D	2 - 2'7½"	
Short End Tension	11	A-441	1.14"D + .75"D	3'1"-3'0"	

LACLEDE STEEL COMPANY D105- T 6 -Sheet 2

WORLD TRADE CENTER
FLOOR GRID TRUSSES
DESIGN DATA

TRUSS UNIT MARKED 2C32T6 Refer to drawings ST101, 4, 5, 6, 8

Clearspan "L" = 34.83 ft. Spacing = 6.67 ft.

Applicable Total Moment = 4,780,000 inch pounds.

Based on ____ lbs./sq. ft. Total Load "W".

R = 65,000

Applicable End Reaction = R = 32,000 pounds.

Based on ____ lbs./sq. ft. Total Load "W".

Applicable Total Constr. Moment = 1,053,000 inch pounds.

Based on 75 lbs./sq. ft. Construction Load.

Applicable Constr. End Reaction = 9360 pounds.

Based on 75 lbs./sq. ft. Construction Load.

"V" Shear at End Panel = _____ pounds. ED = _____ ft.

WEB MEMBER #1 Distance from End Panel = _____ ft.

Applicable Shear V_x = 26,630 lbs. f_y = 50,000 psi

Slope = 2.65 f_s = 30,000 psi

ℓ = _____ in. f_{sc} = _____ psi

Reqd. Area = 2.35 sq. in. Use 2 - 1.14"D Area = 2.42 sq. in.

2 - 0.75"D

WEB MEMBER #2 Distance from End Panel = — ft.

Applicable Shear V_x = 26,630 lbs. f_y = 50,000 psi

Slope = 1.00 f_s = _____ psi

ℓ = _____ in. f_{sc} = 16,880 psi

Reqd. Area = 1.53 sq. in. Use 2 - 1.14"D Area = 2.04 sq. in.

WEB MEMBER #3 Distance from End Panel = _____ ft.

Applicable Shear V_x = 17,920 lbs. f_y = 50,000 psi

Slope = 1.162 f_s = _____ psi

ℓ = 29.5 in. f_{sc} = 13,870 psi

Reqd. Area = 1.51 sq. in. Use 2 - 1.14"D Area = 2.04 sq. in.

WEB MEMBER #4 Distance from End Panel = — ft.

Applicable Shear V_x = 48,760 lbs. f_y = 50,000 psi

Slope = 1.162 f_s = — psi

l = 29.5 in. f_{sc} = 13,870 psi

Reqd. Area = 4.08 sq. in. Use 2 - 1.14" DIA. Area = 4.08 sq. in.
+ 2 - 1.14" DIA.

WEB MEMBER #5 Distance from End Panel = — ft.

Applicable Shear V_x = 59,830 lbs. f_y = 50,000 psi

Slope = 1.45 f_s = 30,000 psi

l = — in. f_{sc} = — psi

Reqd. Area = 2.90 sq. in. Use 2 - 1.14" DIA. Area = 2.92 sq. in.
+ 2 - 0.75" DIA.

CHORD MEMBER #6 Consists of 4 - 2" x 1½" x 0.31" Angles

Construction Load Design Area = 4.30 sq. in.

Applicable Moment = 1,053,000 in. lbs. f_y = 50,000 psi

l = 35.375 in. f_s = — psi

r_x = 0.43 in. f_{sc} = 19,080 psi

r_z = 0.31 in. (with fillers in middle 60% of span)

$\frac{l}{r_x}$ = 77.5

$\frac{l}{2r_z}$ = 53.8 $\frac{f_a}{F_a} + \frac{f_b C_m}{F_b\left(1 - \frac{f_a}{F'_e}\right)}$ = 0.508 less than 1

f_a = 2,750 psi

F_a = 19,080 psi

f_b = 1,110 psi

F_b = 30,000 psi

F'_e = 24,750 psi

Use 4 - 2" x 1½" x 0.31" 4's Area = 4.30 sq. in.

CHORD MEMBER #7 Consists of 4 - 3" x 2" x 0.37" Angles

Total Load Design Area = 7.32 sq. in.

LACLEDE STEEL COMPANY D105- T 6 -Sheet 3A

SPECIAL SECTIONS

(Extended, square ends, etc.)

MEMBER 9

Slope = 1.162 V_x = 17,920 lbs. f_y = 50,000 psi

ℓ = 22.5 in. f_s = 36,000 psi

Req'd. Area = .695 sq.in. Use 2 - 1.14"D Area 2.04 sq.in

MEMBER 10

Slope = 1.00 V_x = 59,830 lbs. f_y = 50,000 psi

ℓ = 25.5 in. f_s = 36,000 psi

Req'd. Area = 3.55 sq.in. Use 2 - 1.14"D / 2 - 1.14"D Area 4.08 sq.in.

MEMBER 11

Slope = 1.162 V_x = 56,700 lbs. f_y = 50,000 psi

f_s = 36,000 psi

Req'd. Area = 2.20 sq.in. Use 2 - 1.14"D / 2 - 0.75"D Area 2.92 sq.in.

CHORD MEMBER #7 (CONTD.)

Applicable Moment = 4,730,000 in lbs. f_y = 36,000 psi

f_s = 22,000 psi

D_t = 33.00 in. f_{sc} = —— psi

B_{eff} = 64.00 in.

t = 4.00 in.

y_1 = 2.00 in. d_2 = 5.69 in.

y_2 = 4.46 in. d_3 = 22.29 in.

y_3 = 32.44 in. c_1 = 10.15 in.

d_1 = 8.15 in. c_2 = 22.85 in.

$$I_s = \sum [(I_c + A_c d_1^2) + (I_{TCA} + A_{TCA} d_2^2) + I_{BCA} + A_{BCA} d_3^2]$$

$$\bar{y} = \frac{\sum (A_c y_1 + A_{TCA} y_2 + A_{BCA} y_3)}{\sum (A_c + A_{TCA} + A_{BCA})}$$

$\bar{y}$ = 10.15 in.

I_s = 4,927 in.^{4} (2C32T6)

Resisting Moment = $f_s \times \frac{I_s}{c_2}$ = 4,740,000 in. lbs.

Use 4 - 3" x 2" x 0.37" Z's Area = 7.32 sq. in.

Composite Design Top Chord Check

Total Load Design f_c = 3,000 psi

Applicable Moment = 4,730,000 in. lbs. f'_c = 1,350 psi

$$f'_{cc} = \frac{Mc_1}{15 I_s} = 648 \text{ psi}$$

CHORD MEMBER #8 Consists of 4 - 2" x 1½" x 0.31" Angles

Area = 4.30 sq. in.

(SAME AS MEMBER 6)

LACLEDE STEEL COMPANY

D106- T 7 -Sheet 2

WORLD TRADE CENTER
BRIDGING TRUSSES
DESIGN DATA

TRUSS UNIT MARKED C 2B T 7 Refer to drawings ST 104, 6, 9

NEGATIVE MOMENT

CHORD MEMBER 96 Consists of 2 - 3"x 1½"x 0.31" angles

Area = 2.15 sq. in.

d_e = 22.98 in.

f_y = 50,000 psi

f_s = 30,000 psi

f_{sc} = —— psi

$M = A_{TCA}\ f_s\ d_e = (2.15)(30{,}000)(22.98)$

M = 1,470,000 in lbs.

CHORD MEMBER 97 Consists of 2 - 3"x 2"x 0.37" angles

Area = 3.66 sq. in.

ℓ = 35.25 in.

r_x = 0.57 in.

r_z = 0.94 in.

$\frac{\ell}{r_x}$ = 61.9

$\frac{\ell}{2r_z}$ = 80.2

f_y = 36,000 psi

f_s = —— psi

f_{sc} = 16,340 psi

(With fillers where required)

d_e = 22.98 in.

$M = A_{BCA}\ f_{sc}\ d_e = (3.66)(16{,}340)(22.98)$

M = 1,374,000 in lbs.

MAXIMUM NEGATIVE MOMENT = 1,374,000 in. lbs.

LACLEDE STEEL COMPANY

D106- T 7 -Sheet 3

POSITIVE MOMENT

CHORD MEMBER #7 Consists of 2 - 3" x 2" x 0.37" angles

Area = 3.66 sq. in.

D_t = 29.5 in. f_y = 36,000 psi

B_{eff} = 64.0 in. f_s = 22,000 psi

t = 4.00 in. f_{cc} = ——— psi

y_1 = 2.00 in.

y_2 = 5.96 in. d_3 = 22.25 in.

y_3 = 28.94 in. c_1 = 6.69 in.

d_1 = 4.69 in. c_2 = 22.81 in.

d_2 = 0.73 in.

$$I_s = (I_c + A_c d_1^2) + (I_{TCA} + A_{TCA} d_2^2) + I_{BCA} + A_{BCA} d_3)$$

$$\bar{y} = \frac{(A_c y_1 + A_{TCA} y_2 + A_{BCA} y_3)}{(A_c + A_{TCA} + A_{BCA})}$$

$\bar{y}$ = 6.69 in.

I_s = 2,214 in.^{4} (C28T7)

Resisting Moment = $f_s \times \frac{I_s}{c_2}$ = 2,133,000 in. lbs.

Composite Design Top Chord Check

Applicable Moment = 2,133,000 in. lbs. f_c = 3,000 psi

f'_c = 1,350 psi

$f'_{cc} = \frac{Mc_1}{15I_s}$ = 430 psi

Maximum Positive Moment = 2,133,000 in. lbs.

Design of Web f_y = 36,000 psi

Use 0.92" DIA. Area = 0.67 sq. in.

CHORD MEMBER #7 (CONTD.)

Applicable Moment = 1,980,000 in lbs. f_y = 36,000 psi

f_s = 22,000 psi

y_t = 29.50 in. f_{sc} = — psi

y_{eff} = 64.00 in.

t = 4.00 in.

y_1 = 2.00 in. d_2 = 0.73 in.

y_2 = 5.96 in. d_3 = 22.25 in.

y_3 = 28.94 in. c_1 = 6.69 in.

d_1 = 4.69 in. c_2 = 22.81 in.

$$I_s = \sum [(I_c + A_c d_1^2) + (I_{TCA} + A_{TCA} d_2^2) + I_{BCA} + A_{BCA} d_3]$$

$$\bar{y} = \frac{\sum (A_c y_1 + A_{TCA} y_2 + A_{BCA} y_3)}{\sum (A_c + A_{TCA} + A_{BCA})}$$

$\bar{y}$ = 6.69 in.

I_s = 2214 in.^{4} (C28T7)

resisting Moment = $f_s \times \frac{I_s}{y_2}$ = 2,133,000 in. lbs.

Use 2 - 3" x 2" x 0.37" ⊥'s Area = 3.66 sq. in.

Composite Design Top Chord Check

Total Load Design f_c = 3,000 psi

Applicable Moment = 1,980,000 in. lbs. f'_c = 1,360 psi

$$f'_{cc} = \frac{M_{cl}}{15 I_s} = 390 \text{ psi}$$

CHORD MEMBER #8 Consists of 2 - 2" x 1½" x 0.31" Angles

Area = 2.15 sq. in.

(SAME AS MEMBER 6)

LACLEDE STEEL COMPANY D106- T 7 -Sheet 4A

WEB MEMBER #1

R = 22,000 lbs. f_y = 50,000 psi

V_1 = 21,000 lbs. f_s = 30,000 psi

Slope = 2.07 f_{sc} = —— psi

Reqd. Area = 1.45 sq. in. Use 2-0.98" DIA. Area = 1.51 in.^{2}

LACLEDE STEEL COMPANY

D106- T8 -Sheet 2

WORLD TRADE CENTER
BRIDGING TRUSSES
DESIGN DATA

TRUSS UNIT MARKED C28T8 Refer to drawings ST 104, 6.9

NEGATIVE MOMENT

CHORD MEMBER #6 Consists of 2 - 2" x 1½" x 0.31" angles

Area = 2.15 sq. in.

d_e = 22.98 in. f_y = 50,000 psi

f_s = 30,000 psi

f_{sc} = — psi

$M = A_{TCA}\ f_s\ d_e = (2.15)(30,000)(22.98)$

M = 1,470,000 in lbs.

CHORD MEMBER #7 Consists of 2 - 3" x 2" x 0.37" angles

Area = 3.66 sq. in.

ℓ = 35.25 in.

r_x = 0.57 in.

r_z = 0.44 in

f_y = 36,000 psi

f_s = —

$\frac{\ell}{r_x}$ = 61.9

f_{sc} = 16,340 psi

$\frac{\ell}{2r_z}$ = 80.2 (With fillers where required)

d_e = 22.98 in.

$M = A_{BCA}\ f_{sc}\ d_e = (3.66)(16,340)(22.98)$

M = 1,374,000 in lbs.

MAXIMUM NEGATIVE MOMENT = 1,374,000 in. lbs.

POSITIVE MOMENT

CHORD MEMBER #7 Consists of 2 - 3" x 2" x 0.37" angles

Area = 3.66 sq. in.

D_t = 29.5 in. f_y = 36,000 psi

B_{eff} = 64.0 in. f_s = 22,000 psi

t = 4.00 in. $f_{...}$ = ____ psi

y_1 = 2.00 in.

y_2 = 5.96 in. d_3 = 22.25 in.

y_3 = 28.94 in. c_1 = 6.69 in.

d_1 = 4.69 in. c_2 = 22.81 in.

d_2 = 0.73 in.

$$I_s = (I_c + A_c d_1^2) + (I_{TCA} + A_{TCA} d_2^2) + I_{BCA} + A_{BCA} d_3)$$

$$\bar{y} = \frac{(A_c y_1 + A_{TCA} y_2 + A_{BCA} y_3)}{(A_c + A_{TCA} + A_{BCA})}$$

$\bar{y}$ = 6.69 in.

I_s = 2,214 in.^{4} (C2878)

Resisting Moment = $f_s \times \frac{I_s}{c_2}$ = 2,133,000 in. lbs.

Composite Design Top Chord Check

Applicable Moment = 2,133,000 in. lbs. f_c = 3,000 psi

f'_c = 1,350 psi

$f'_{cc} = \frac{Mc_1}{151 I_s}$ = 430 psi

Maximum Positive Moment = 2,133,000 in. lbs.

Design of Web f_y = 36,000 psi

Use 0.92" DIA. Area = 0.67 sq. in.

CHORD MEMBER #7 (CONTD.)

Applicable Moment = 2,090,000 in lbs. f_y = 36,000 psi

f_s = 22,000 psi

D_t = 29.50 in. f_{sc} = ——— psi

B_{eff} = 64.00 in.

t = 4.00 in.

y_1 = 2.00 in. d_2 = 0.73 in.

y_2 = 5.96 in. d_3 = 22.25 in.

y_3 = 28.94 in. c_1 = 6.69 in.

d_1 = 4.69 in. c_2 = 22.81 in.

$$I_s = \sum [(I_c + A_c d_1^2) + (I_{TCA} + A_{TCA} d_2^2) + I_{BCA} + A_{BCA} d_3]$$

$$\bar{y} = \frac{\sum (A_c y_1 + A_{TCA} y_2 + A_{BCA} y_3)}{\sum (A_c + A_{TCA} + A_{BCA})}$$

$\bar{y}$ = 6.69 in.

I_s = 2214 in.^{4} (C28T8)

Resisting Moment = $f_s \times \frac{I_s}{c_2}$ = 2,133,000 in. lbs.

Use 2 - 3" x 2" x 0.37" $\not\Delta$ Area = 7.32 sq. in.

Composite Design Top Chord Check

Total Load Design f_c = 3,000 psi

Applicable Moment = 2,090,000 in. lbs. f'_c = 1,350 psi

$$f'_{cc} = \frac{M c_1}{15 I_s} = 421 \text{ psi}$$

CHORD MEMBER #8 Consists of 2 - 2" x 1½" x 0.31" Angles

Area = 2.15 sq. in.

(SAME AS MEMBER 6)

LACLEDE STEEL COMPANY

D106- T 9 -Sheet 2

WORLD TRADE CENTER
BRIDGING TRUSSES
DESIGN DATA

TRUSS UNIT MARKED C 2 8 T 9 Refer to drawings ST 104.6.9

NEGATIVE MOMENT

CHORD MEMBER #6 Consists of 2 - 2" x 1½" x 0.31" angles

Area = 2.15 sq. in.

d_e = 22.98 in. f_y = 50,000 psi

f_s = 30,000 psi

f_{sc} = — psi

$M = A_{TCA}\ f_s\ d_e = (2.15)(30,000)(22.98)$

M = 1,470,000 in lbs.

CHORD MEMBER #7 Consists of 2 - 3" x 2" x 0.37" angles

Area = 3.66 sq. in.

ℓ = 35.25 in.

r_x = 0.57 in. f_y = 36,000 psi

r_z = 0.44 in. f_s = — psi

$\frac{\ell}{r_x}$ = 61.9 f_{sc} = 16,340 psi

$\frac{\ell}{2r_z}$ = 80.2 (With fillers where required)

d_e = 22.98 in.

$M = A_{BCA}\ f_{sc}\ d_e = (3.66)(16,340)(22.98)$

M = 1,374,000 in lbs.

MAXIMUM NEGATIVE MOMENT = 1,374,000 in. lbs.

POSITIVE MOMENT

CHORD MEMBER #7 Consists of 2-3"x 2"x 0.37" angles

Area = 3.66 sq. in.

D_t = 29.5 in. f_y = 36,000 psi

B_{eff} = 64.0 in. f_s = 22,000 psi

t = 4.00 in. f_{sc} = —— psi

y_1 = 2.00 in.

y_2 = 5.96 in. d_3 = 22.25 in.

y_3 = 28.94 in. c_3 = 6.69 in.

c_1 = 4.69 in. c_2 = 22.81 in.

d_2 = 0.73 in.

$$I_s = (I_c + A_c c_1^2) + (I_{TCA} + A_{TCA} d_2^2) + I_{BCA} + A_{BCA} d_3)$$

$$\bar{y} = \frac{(A_c y_1 + A_{TCA} y_2 + A_{BCA} y_3)}{(A_c + A_{TCA} + A_{BCA})}$$

$\bar{y}$ = 6.69 in.

I_s = 2,214 in.^{4} (C28T9)

Resisting moment = $f_s \times \frac{I_s}{c_2}$ = 2,133,000 in. lbs.

Composite Design Top Chord Check

Applicable Moment = 2,133,000 in. lbs. f_c = 3,000 psi

f'_c = 1,350 psi

$f'_{cc} = \frac{Mc_1}{15I_s}$ = 430 psi

Maximum Positive Moment = 2,133,000 in. lbs.

Design of Web f_y = 36,000 psi

Use 0.92" DIA. Area = 0.67 sq. in.

LACLEDE STEEL COMPANY SAINT LOUIS, MISSOURI

DRAWING NO. ST 111 SUBJECT COVER PLATE DETAILS

BY W.H. DATE 3-6-87 WORLD TRADE CENTER TOWERS

CHKD. BY ACW DATE 3-7-87 NEW YORK N.Y.

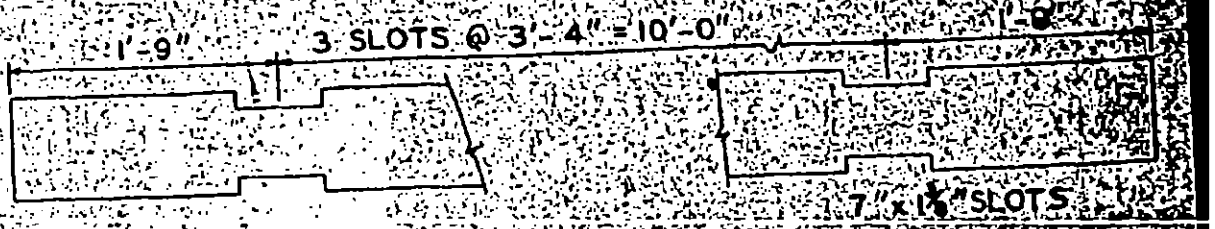

TYPE A 13'-6" LG.

8½" WIDE A
6½" WIDE A1 } .0135 MIN. THICKNESS

17280 PCS. 13'-6" LONG TYPE A REQUIRED
2880 " " A1

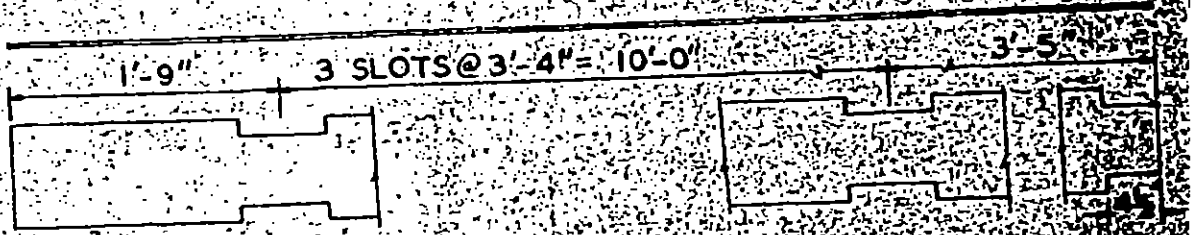

TYPE B 15'-2" LG

8½" WIDE B
6½" WIDE B1 } .0135 MIN. THICKNESS

17280 PCS. 15'-2" LONG TYPE B REQUIRED
2880 B1

TYPE C 13'-6" LG

4" WIDE
.0135 MIN. THICKNESS

1440 PCS 13'-6" LONG TYPE C REQUIRED

LACLEDE STEEL COMPANY SAINT LOUIS, MISSOURI

DRAWING NO. ST 112 SUBJECT COVER PLATES DETAILS
BY L.W.H. DATE 3-6-67 WORLD TRADE CENTER TOWERS
CHKD. BY A.C.W. DATE 3-7-67 NEW YORK N.Y.

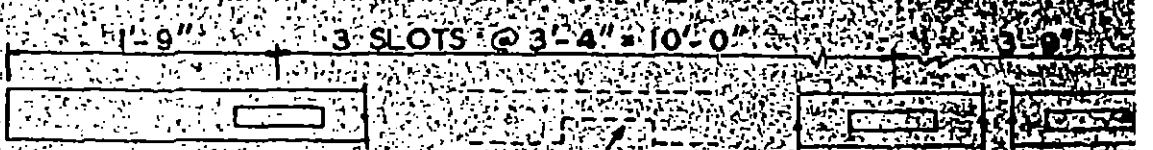

TYPE "D" 15'-6" LG

4" WIDE .0135 MIN. THICKNESS

1440 PCS. 15'-6" LONG TYPE "D" REQUIRED

TYPE "E" 16'-10" LG

6½" WIDE .0135 MIN. THICKNESS

9640 PCS 16'-10" LONG

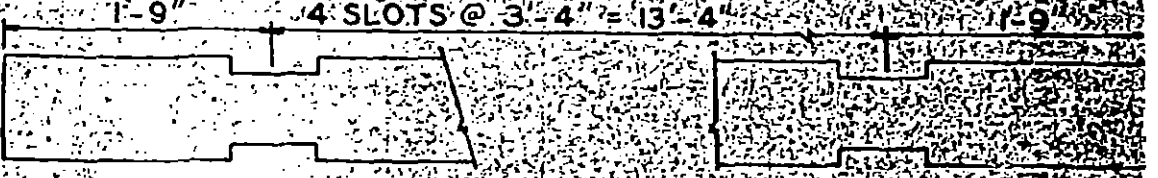

TYPE "F" 16'-10" LG

8½" WIDE .0135 MIN THICKNESS

1440 PCS 16'-10" LONG TYPE "F" REQUIRED

LACLEDE STEEL COMPANY
STRUCTURAL DETAILS
WORLD TRADE CENTER TOWERS
PORT OF NEW YORK AUTHORITY

Detail No.	Title	Date Transmitted	Approved
ST-101	Typical 32" composite truss web Intermediate Panel - Full Scale		
ST-102	Typical web chord sections 32" composite trusses - Full Scale		
ST-103	Intermediate panel details 24" standard trusses 32" composite trusses - Full Scale		
ST-104	Intermediate panel details 28" composite trusses 32" composite trusses - Full Scale		
ST-105	Corner intersection details Continuity of 32" - 60' span composite trusses (CT3, CT3A and CT4) into 28" composite trusses (CT9) in 35' span - Full Scale		
ST-106	Typical column bearing end detail of 32" composite trusses 2" x 2" damping unit extension Scale ½" = 1"		
ST-106A	Column bearing end detail showing diagonal angle bracing attachment 32" composite trusses Scale ½" = 1"		
ST-106B	Column bearing end detail Typical extended shallow bearing end - 32" composite trusses Scale ½" = 1"		
ST-106C	Column bearing end detail showing damping unit extension for 28" composite trusses 24" standard trusses Scale ½" = 1"		

Detail No.	Title	Date Transmitted	Approved
ST-106D	Column bearing end detail showing diagonal angle bracing attachment 28" composite trusses 24" standard trusses Scale ½" = 1"		
ST-106E	Column bearing end detail typical extended shallow bearing end 28" composite trusses 24" standard trusses Scale ½" = 1"		
ST-107	32" composite truss details Approximate 60' span Type CT1, CT2, CT3, CT3A and CT4 - Scale 1½" = 1'0"		
ST-108	32" composite truss details Approximate 35' span Type CT5 and CT6 Scale 1½" = 1'0"		
ST-109	28" composite truss details Corner construction Type CT7, CT8 & CT9 Scale 1½" = 1'0"		
ST-110	24" standard truss details 20'0" transverse ST8, ST10, ST11 and ST12 (duct) 13'4" transverse ST13 Scale 1½" = 1'0"		
ST-111	Cover plate details .0135" plates A, B, and C		
ST-112	Cover plate details .0135" plates D, E, and F		

LACLEDE STEEL COMPANY

Index 2A

Detail No.	Title	Date Transmitted	Approved
ST-113	32" composite truss details Typical column end bearing details - trusses CT1, 2, 3, 3A, 4, 5, and 6 Core end details 58'5", 58'3", and 57'7" spans - trusses CT1 and 2 - Full Scale		
ST-114	32" composite truss details Core end bearing details 59'9" and 59'8" spans - trusses CT1 and 2 - Full Scale		
ST-115	32" composite truss details Core end bearing details 59'3", 59'2", and 58'11" spans Trusses CT1 and 2 - Full Scale		
ST-116	32" composite truss details Core end bearing details Trusses CT5 and CT6 35'8" span Full Scale		
ST-117	28" composite truss details Truss CT7 - 19'6" span 24" standard truss details Truss ST10 - 19'6" span Column end bearing detail Full Scale		

LACLEDE STEEL COMPANY
FLOOR GRID PANEL & PANEL LOCATIONS
WORLD TRADE CENTER TOWERS
PORT OF NEW YORK AUTHORITY

Detail No.	Title	Date Transmitted	Approved
L-100	Typical floor plan - showing panel designation, truss location, applicable design moments and end reaction for truss design - Scale 1/8" = 1'0"		
L-101	Quarter plan - Typical floor showing panel designation, truss location, truss designation and truss web configuration Scale 1/8" = 1'0"		

LACLEDE STEEL COMPANY
DESIGN CALCULATIONS
WORLD TRADE CENTER TOWERS
PORT OF NEW YORK AUTHORITY

Sheet No.	Design Data	Date Transmitted	Approved
D100-1 thru 7	Basic Design Data		
D101	Chord Angle Properties 2" x 1/2" angles		
D102	Chord Angle Properties 3" x 2" angles		
D103	[illegible] Properties		
D104	Miscellaneous Section Properties		
D105-T1	Design Data Truss Mk. 2C32T1		
D105-T2	Design Data Truss Mk. 2C32T2		
D105-T3	Design Data Truss Mk. 2C32T3		
D105-T3A	Design Data Truss Mk. 2C32T3A		
D105-T4	Design Data Truss Mk. 2C32T4		
D105-T5	Design Data Truss Mk. 2C32T5		
D105-T6	Design Data Truss Mk. 2C32T6		
D105-T7	Design Data Truss Mk. [illegible]		
D105-T8	Design Data Truss Mk. C28T8		
D105-T9	Design Data Truss Mk. C28T9		
D105-T10	Design Data Truss Mk. S24T10		
D105-T11	Design Data Truss Mk. S24T11		
D105-T12	Design Data Truss Mk. S24T12		
D105-T13	Design Data Truss Mk. S24T13		
D105-ET1	Design Data Extended End Truss Mk. 2C32ET1		
D105-ET2	Design Data Extended End Truss Mk. 2C32ET2		
D105-ET3	Design Data Extended End Truss Mk. 2C32ET3		

LACLEDE STEEL COMPANY

Index 5

Sheet No.	Design Data	Date Transmitted	Approved
D105-ET3A	Design Data Extended End Truss Mk. 2C32ET3A		
D105-ET4	Design Data Extended End Truss Mk. 2C32ET4		
D105-ET5	Design Data Extended End Truss Mk. 2C32ET5		
D105-ET6	Design Data Extended End Truss Mk. 2C32ET6		
D105-ET7	Design Data Extended End Truss Mk. C28ET7		
D105-ET10	Design Data Extended End Truss Mk. S24ET10		

LACLEDE STEEL COMPANY

D100-1
Date February 6, 1967

WORLD TRADE CENTER
FLOOR GRID TRUSSES
BASIC DESIGN DATA

Based on double truss units. Mark 2CT__ or 2ST__.
Single truss components. Mark CT__ or ST__.

DIMENSIONS:

Unless specifically noted otherwise, see "ST" Details.

Truss clearspan in feet = L. Overall length of truss minus end bearings in feet (2 x 5" = 10"). Example: 59'9" overall length - 59'9" - 10" or 58'11" or 58.92'.

Length of member, clear of attachments = "ℓ"

Depth of Truss

Composite type "C" (Measured top of shear member to bottom of lower chord.)

Standard type "S" (Measured out to out of chord members.)

Total depth of composite section = "D_t"

TOLERANCES:

Overall length 1/4"+ or 1/4"-.

Depth 1/8"+ or 1/8"-.

LOADS:

Total load = Live load + Dead load

Applicable for composite design.

Applicable for combined slab and top chord design and bottom chord design.

Construction load = Applicable Dead load

Applicable for top and bottom chord steel design.

Dead load = Actual weight of structural system in pounds per square foot.

Live load = Assigned live load for panel area in pounds per square foot.

Design load in pounds per square foot = "w"

Applicable design load in pounds per foot equals design load in pounds per square foot times spacing of trusses in feet = ... "W"

TOTAL MOMENT:

"M" (In inch pounds) = WL^2 x 1.5.

END REACTION:

"R" (In pounds) = "W" x .5 (overall length of truss in feet).

SHEAR:

At first top chord panel in pounds = V = R- (W x ED)

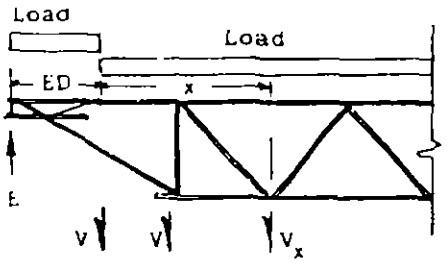

ED = Distance first top chord panel point to truss end.

Shear at other points in pounds = V_x = (R- ED x W)-W (distance to first top chord panel point in feet).

(In no case less than 50% of end reaction "R".)

DESIGNATION OF MEMBERS:

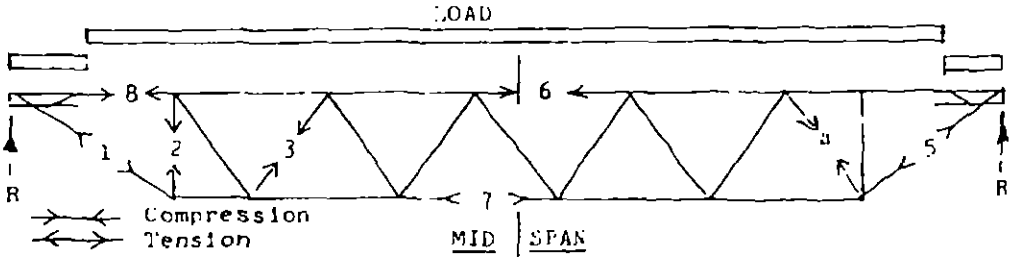

1. End diagonal (long end) tension member
2. First panel vertical (long end) compression
3. Second panel compression diagonal
4. First panel vertical (short end) compression
5. End diagonal (short end) tension.
6. Top chord critical compression member at mid span
7. Bottom chord critical tension member at mid span
8. End top chord compression member (long end)

MATERIALS:

A-36 steel . . . . . 36 ksi minimum yield strength

A-441 modified . . . . . 50 ksi minimum yield strength low alloy "H" Series.

See sheets D101 through D103 for Properties of Sections.

APPLICABLE FORMULAE: Stress Determination (Web or Chord Members)

A-36 steel

(36 ksi minimum yield)

f_y = Minimum Yield Strength 36,000 psi

f_s = Tension 22,000 psi

f_{sc} = Compression for $\ell/r < 127$ $18,540 - .574 (\ell/r)^2$ psi

for $\ell/r > 127$ $\frac{149,000,000}{(\ell/r)^2}$ psi

ℓ = clear distance between attachments

r = least radius of gyration

A-441 steel

(50 ksi minimum yield)

f_y = Minimum Yield Strength 50,000 ksi

f_s = Tension 30,000 psi

f_{sc} = Compression for $\ell/r < 108$ $25,750 - 1.108 (\ell/r)^2$ psi

for $\ell/r > 108 < 200$ $\frac{149,000,000}{(\ell/r)^2}$ psi

Continuous members shall be designed for only axial compressive stress when the panel length clear of attachments does not exceed 24". When the panel length clear of attachments exceeds 24", the top chord shall be designed as a continuous member subject to combined axial and bending stress and shall be of proportion that the quantity -

$$\frac{f_a}{30,000} + \frac{f_b}{F_b}$$

does not exceed unity at the panel point, or that the quantity -

$$\frac{f_a}{F_a} + \frac{f_b C_m}{F_b \left(1 - \frac{f_a}{F'_e}\right)}$$

does not exceed unity at the mid panel.

Permissible axial unit compressive stress = "F_a"

Permissible bending unit stress = "F_b"

Permissible compressive stress factor (column equation $\frac{149,000,000}{(\ell/r)^2}$ psi) = "F'_e"

Actual axial unit compressive stress = ... f_a

Actual bending unit stress = ... f_b

MAXIMUM SLENDERNESS RATIOS:

Top chord panels (interior) = 85
Top chord end panels = 120
Compression members other than top chord = 200
Tension members = 240

FILLERS OR TIES.

Members in compression composed of two components shall have fillers or ties spaced so that the ratio of ℓ/r of each component shall not exceed the ratio of ℓ/r of the whole [illegible]. The minimum "r" shall be used in calculating the critical ratio ℓ/r of any component.

SHEAR CONNECTORS:

Shall be considered to provide a minimum 15 ksi horizontal shear per web end connector imbedded in the concrete. This is for 3,000 psi concrete. (f_c)

DEFLECTION:

Applicable deflection formula for uniform load.

Maximum deflection $\Delta = \frac{25.88\ (WL^4)}{29{,}000{,}000I}$

COMPOSITE SLAB AND JOIST DESIGN.

Design values

Total depth of combined slab and truss in inches = ... D_t

Effective width of concrete flange in inches equal to 2 x 8t = ... B_{eff}

Distance from top of concrete flange to neutral axis of concrete flange = ... y_1

Distance from top of concrete flange to neutral axis of top chord angles = ... y_2

Distance from top of concrete flange to neutral axis of bottom chord angles = ... y_3

Distance from top of concrete flange to neutral axis of composite section = ... y

Distance from neutral axis of composite section to neutral axis of concrete flange = ... d_1

Distance from neutral axis of composite section to neutral axis of top chord angles = ... d_2

Distance from neutral axis of composite section to neutral axis of bottom chord angles = ... d_3

Distance from neutral axis of composite section to outermost fibers of compression chord = ... c_1

Distance from neutral axis of composite section to outermost fibers of tension chord = ... c_2

Allowable concrete strength f'_c = 4,000 pounds psi.

Allowable steel strength = ... f_s

Allowable steel [illegible] f'_c = 1,250 pounds psi

Actual concrete compressive stress = ... f'_{cc}

Allowable steel compressive stress = ... f_{sc}

Modular ratio = 15 = ... $\frac{E_s}{E_c}$

SECTION PROPERTIES. (Refer to Sheets D101 through D103)

Moment of inertia of concrete = ... I_c

Moment of inertia of top chord angles = ... I_{TCA}

Moment of inertia of bottom chord angles = ... I_{BCA}

Moment of inertia of composite system = ... I_S

Area of concrete flange = ... A_c

Area of top chord angles = ... A_{TCA}

Area of bottom chord angles = ... A_{BCA}

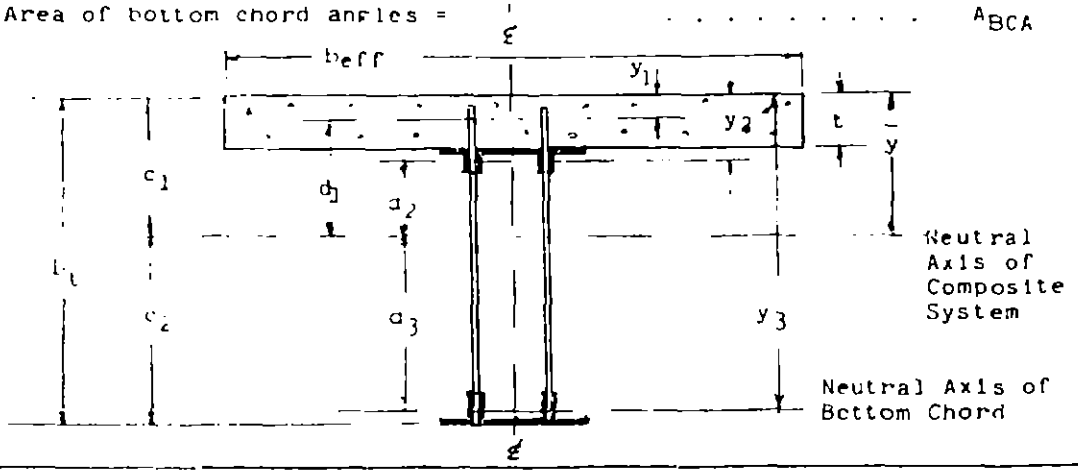

FORMULAE:

Resisting moment = "RM"

Allowable unit stress times the applicable Section Modulus = (applicable f x S).

Section Modulus (about the axis of bending) = $S = \frac{I}{C_1 \text{ or } C_2}$

QUALITY CONTROL AND INSPECTION:

Material Test Reports

Since all steel employed in the fabrication of trusses is produced in the furnaces and mills of Laclede Steel Company, certified mill test reports showing heat numbers, chemistry, and physical properties for all steel [illegible] will be provided.

Resistance Welding

Truss panel points will be connected by electronically controlled resistance welding providing two times the strength of the connected members at full design load.

Angle chords of carbon and alloy steel to be of weldable grade with contact surfaces cleaned of scale by shot blasting prior to welding.

Welds to be subject to "on-line" testing by measured hydraulic wedge action tester with spot checking of finished panel point welds by testing in vertical double shear to two times design load value.

Any panel point welds indicated to have less than the established factor for weld shear strength will be arc welded, subsequent to testing.

Full design load tests will be effected on full size and full length truss components by hydraulic loading in a test frame with load measurement by electric load cell and center span deflection check.

Load tests with recorded deflection and recovery data will be made on a minimum of one of each identified truss style involved in the panel construction.

Physical Tension Tests

Tension tests on truss components, chord angles, and webs will be performed on selected sample members included in the normal truss fabrication.

Inspection and Access to Plant

Free access to the plant of the truss manufacturer and the

available inspection and test facilities will be offered the qualified inspectors representing the purchaser for observation of the test and inspection procedures outlined herein.

Any testing requested beyond that identified herein shall be for the account of the purchaser.

LACLEDE STEEL COMPANY SAINT LOUIS, MISSOURI

DRAWING NO DJ01 SUBJECT WORLD TRADE CENTER TOWERS
BY L.J.S DATE 2-6-67 THE PORT OF NEW YORK AUTHORITY
CHKD BY A.C.W DATE 2-7-67

TRUSS SECTION COMPONENTS
TRUSS ANGLE SECTIONS
DESIGN SECTION PROPERTIES

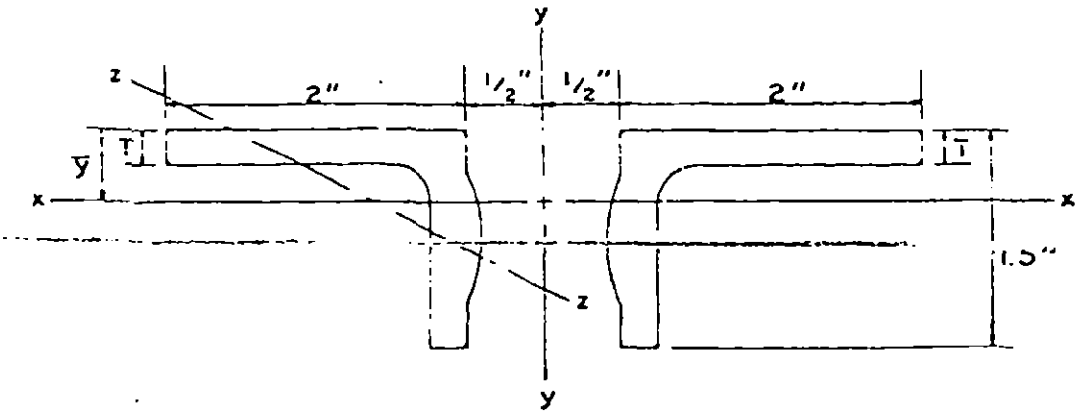

2"x 1½" x T

T			0.37 in	1/2 - 1/8 - 13	
AREA			2.48	1.24	
$\bar{y}$			0.48	0.28	
I_x			0.45	0.18	
I_y			3.24		
r_x			0.42	0.35	
r_y			1.13		
r_z (ONE ANGLE)			0.29	0.26	
LBS/FT (TWO ANGLES)					

LACLEDE STEEL COMPANY SAINT LOUIS, MISSOURI

DRAWING NO. D102 SUBJECT WORLD TRADE CENTER TOWERS
BY L.J.S. DATE 2-6-67 THE PORT OF NEW YORK AUTHORITY
CHKD. BY A.C.W DATE 2-7-67

TRUSS SECTION COMPONENTS
TRUSS ANGLE SECTIONS
DESIGN SECTION PROPERTIES

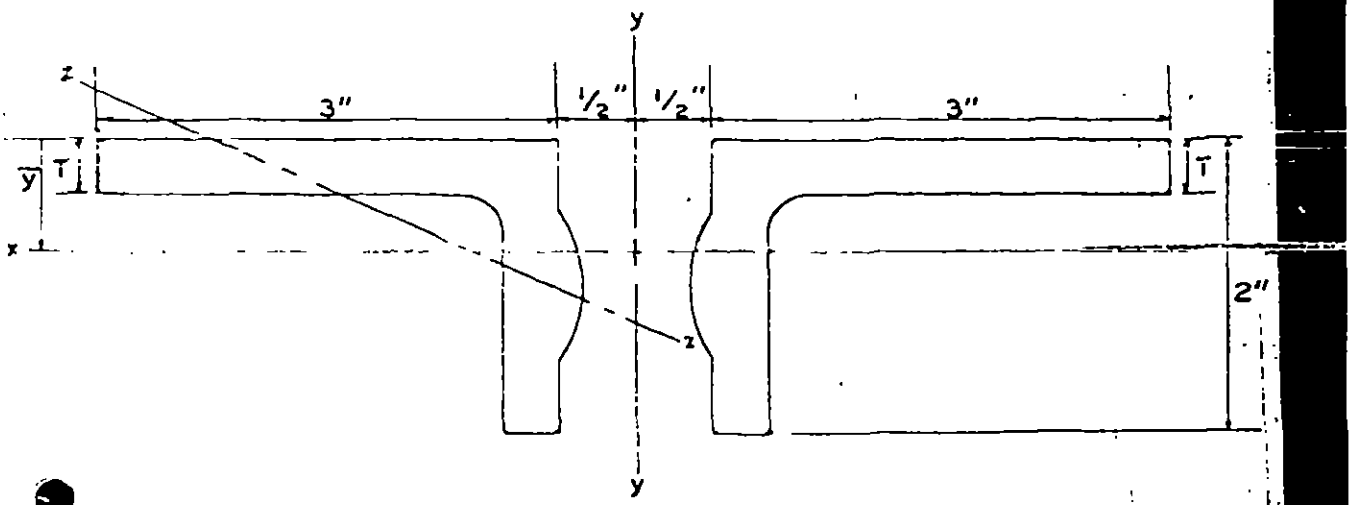

3" x 2" x T

T					
AREA					
$\bar{y}$					
I_x					
I_y					
r_x					
r_y					
r_z (ONE ANGLE)					
LBS / FT (TWO ANGLES)	11.21	12.43			

LACLEDE STEEL COMPANY SAINT LOUIS, MISSOURI

DRAWING NO D.10.3 SUBJECT WORLD TRADE CENTER TOWERS
BY L.J.S. DATE 2-6-67 THE PORT OF NEW YORK AUTHORITY
CHKD BY A.C.W. DATE 2-7-67

TRUSS SECTION COMPONENTS
TRUSS WEB SECTIONS
DESIGN SECTION PROPERTIES

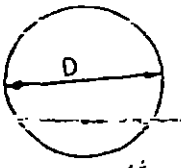

98

99

DIAMETER					0.75 in
AREA		.770			0.44
RAD. OF GYR.					0.1875
LBS/FT					

REVISED 3-15-67

LACLEDE STEEL COMPANY D105- T 1 -Sheet 1

WORLD TRADE CENTER
FLOOR GRID TRUSSES
DESIGN DATA

Truss Mk. 2C32T1-599

Truss Component Mk. C32T1-599

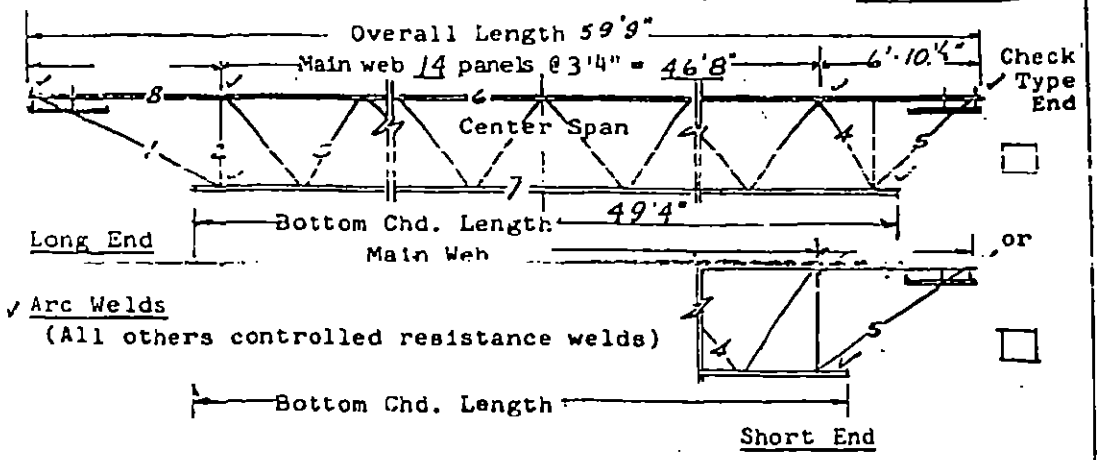

NOTES:

Main Web - Continuous uniform section throughout Member Mk. 3. (Top chord fillers same section as Main Web - at midpoint 10 center web panels minimum.)

Vertical Struts Mk. 2 - Same size as main web.

End Bearing Struts - Same size as main web.

Composite Type - Webs extend above top chord 3".

MEMBERS REQUIRED PER TRUSS COMPONENT S____ or C ✓

Member	Mk.No.	Grade of Steel	Size	Total Length Member	Weight Member
Top Chord	6-8	A-441	2-2" x 1½" x 0.25"t		
Bottom Chord	7	A-36	2-3" x 2" x 0.37"t		
Main Web	3	A-36	1.09" DIA.		
Compression Web	4	A-441	1.14" DIA.		
Vertical End Struts	2	A-36	1.09" DIA.		
Long End Diagonal	1	A-441	1.04" DIA.		
Short End Diagonal	5	A-441	1.14" DIA.		

LACLEDE STEEL COMPANY D105- T 1 -Sheet 1

WORLD TRADE CENTER FLOOR GRID TRUSSES DESIGN DATA

Truss Mk. 2C32T1-599

Truss Component Mk. C32T1-599

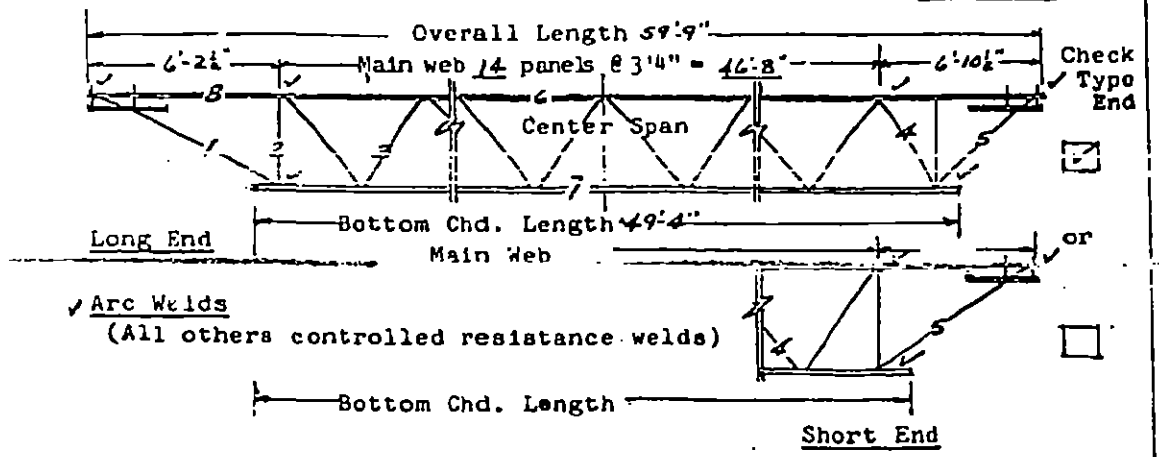

NOTES:

Main Web - Continuous uniform section throughout Member Mk. 3. (Top chord fillers same section as Main Web - at midpoint 10 center web panels minimum.)

Vertical Struts Mk. 2 - Same size as main web.

End Bearing Struts - Same size as main web.

Composite Type - Webs extend above top chord 4".

MEMBERS REQUIRED PER TRUSS COMPONENT S____ or C ✓

Member	Mk.No.	Grade of Steel	Size	Total Length Member	Weight Member
Top Chord	6-8	A-441	2-2" x 1½" x 0.25"t		
Bottom Chord	7	A-36	2-5", 2" x 0.37½t		
Main Web	3	A-36	1.09" DIA		
Compression Web	4	A-441	1.14" DIA		
Vertical End Struts	2	A-36	1.09" DIA		
Long End Diagonal	1	A-441	1.14" DIA		
Short End Diagonal	5	A-441	1.14" DIA		

SPECIAL SECTIONS

(Extended, square ends, etc.)

LACLEDE STEEL COMPANY D105- T 1 -Sheet 2

WORLD TRADE CENTER
FLOOR GRID TRUSSES
DESIGN DATA

TRUSS UNIT MARKED 2C32T1 Refer to drawings ST 101, 6, 7.

Clearspan "L" = 58.92 ft. Spacing = 6.67 ft.

Applicable Total Moment = 4,570,000 inch pounds.

Based on 128 lbs./sq. ft. Total Load "w".

Applicable End Reaction = 25,500 pounds.

Based on 128 lbs./sq. ft. Total Load "w".

Applicable Total Constr. Moment = 1,740,000 inch pounds.

Based on 50 lbs./sq. ft. Construction Load.

Applicable Constr. End Reaction = 10,000 pounds.

Based on 50 lbs./sq. ft. Construction Load.

"V" Shear at End Panel = 22,940 pounds. ED = 3.00 ft.

WEB MEMBER #1 Distance from End Panel = 0.0 ft.

Applicable Shear V_x = 22,940 lbs. f_y = 50,000 psi

Slope = 2.65 f_s = 30,000 psi

l = — in. f_{sc} = — psi

Reqd. Area = 2.05 sq. in. Use 2-1.14" dia. Area = 2.04 sq. in.

WEB MEMBER #2 Distance from End Panel = 0.0 ft.

Applicable Shear V_x = 22,940 lbs. f_y = 36,000 psi

Slope = 1.00 f_s = — psi

l = 25.5 in. f_{sc} = 13,510 psi

Reqd. Area = 1.69 sq. in. Use 2-1.09" dia. Area = 1.87 sq. in.

WEB MEMBER #3 Distance from End Panel = 4.87 ft.

Applicable Shear V_x = 18,780 lbs. f_y = 36,000 psi

Slope = 1.162 f_s = — psi

l = 29.5 in. f_{sc} = 11,820 psi

Reqd. Area = 1.85 sq. in. Use 2-1.09" dia. Area = 1.87 sq. in.

WEB MEMBER #4 Distance from End Panel = 3.04 ft.

Applicable Shear V_x = 20,340 lbs. f_y = 50,000 psi

Slope = 1.162 f_s = — psi

ℓ = 29.5 in. f_{sc} = 13,850 psi

Reqd. Area = 1.71 sq. in. Use 2-1.14" O.A. Area = 2.04 sq. in.

WEB MEMBER #5 Distance from End Panel = 0.0 ft.

Applicable Shear V_x = 22,940 lbs. f_y = 50,000 psi

Slope = 2.20 f_s = 30,000 psi

ℓ = — f_{sc} =

Reqd. Area = 1.68 sq. in. Use 2-1.14" O.A. Area = 2.04 sq. in.

CHORD MEMBER #6 Consists of 4-2"x1½"x0.25" Angles

Construction Load Design Area = 3.60 sq. in.

Applicable Moment = 1,740,000 in. lbs. f_y = 50,000 psi

ℓ = 33.375 in. f_s = — psi

r_x = 0.44 in. f_{sc} = 19,380 psi

r_z = 0.31 in. (with fillers in middle 60% of span)

$\frac{\ell}{r_x}$ = 75.8

$\frac{\ell}{2r_z}$ = 53.8 $\frac{f_a}{F_a} + \frac{f_b\, C_m}{F_b\left(1 - \frac{f_a}{F'_e}\right)}$ = 0.949 less than 1

f_a = 17,250 psi

F_a = 19,380 psi

f_b = 810 psi

F_b = 30,000 psi

F'_e = 25,950 psi

∴ Use 4-2"x1½"x0.25" L's Area = 3.60 sq. in.

CHORD MEMBER #7 Consists of 4-3"x2"x0.37" Angles

Total Load Design Area = 7.32 sq. in.

CHORD MEMBER #7 (CONTD.)

Applicable Moment = 4,570,000 in lbs. f_y = 36,000 psi

f_s = 22,000 psi

D_t = 35.60 in. f_{sc} = — psi

B_{eff} = 64.00 in.

t = 4.00 in.

y_1 =	2.00 in.	d_2 =	5.86 in.
y_2 =	4.44 in.	d_3 =	22.14 in.
y_3 =	34.44 in.	c_1 =	10.30 in.
d_1 =	8.30 in.	c_2 =	22.70 in.

$$I_s = \sum [(I_c + A_c d_1^2) + (I_{TCA} + A_{TCA} d_2^2) + I_{BCA} + A_{BCA} d_3]$$

$$\bar{y} = \frac{\sum (A_c y_1 + A_{TCA} y_2 + A_{BCA} y_3)}{\sum (A_c + A_{TCA} + A_{BCA})}$$

$\bar{y}$ = 10.30 in.

I_s = 4913 $in.^4$ (2C32T1)

Resisting Moment = $f_s \times \frac{I_s}{c_2}$ = 4,770,000 in. lbs.

Use 4 - 3" x 2" x 0.31" Angles Area = 7.72 sq. in.

Composite Design Top Chord Check

Total Load Design f_c = 3,000 psi

Applicable Moment = 4,570,000 in. lbs. f'_c = 1,350 psi

$$f'_{cc} = \frac{M c_1}{15 I_s} = 640 \text{ psi}$$

CHORD MEMBER #8 Consists of 4 - 2" x 1½" x 0.25" Angles

Area = 3.60 sq. in.

(SAME AS MEMBER 6)

LACLEDE STEEL COMPANY

D105- T 2 -Sheet 1

WORLD TRADE CENTER
FLOOR GRID TRUSSES
DESIGN DATA

Truss Mk. 2 C32 T2 - 599

Truss Component Mk. C32T2-599

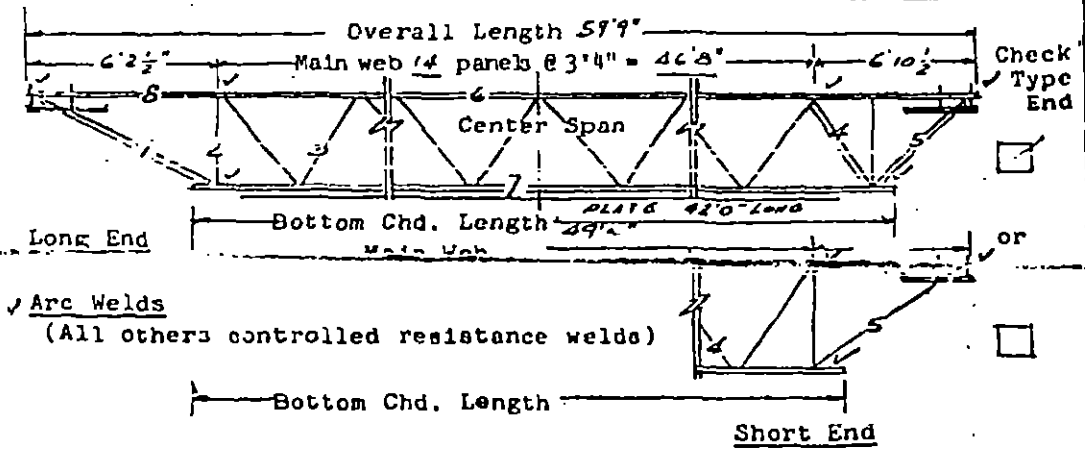

NOTES:

Main Web - Continuous uniform section throughout Member Mk. 3. (Top chord fillers same section as Main Web - at midpoint 10 center web panels minimum.)

Vertical Struts Mk. 2 - Same size as main web.

End Bearing Struts - Same size as main web.

Composite Type - Webs extend above top chord 3 ".

MEMBERS REQUIRED PER TRUSS COMPONENT S____ or C✓

Member	Mk.No.	Grade of Steel		Size	Total Length Member	Weight Member
Top Chord	6-8	A 441	2	2×1½×.31"	59'9"	
Bottom Chord	7	36	2	2×1½×.31"	49'4"	
Main Web	3	441		1.14" D	86'4"	
Compression Web	4	441		1.14"D+.75"D	3'1" 3'0"	
Vertical End Struts	2	441		1.14" D	2'7½" 2'3½"	
Long End Diagonal	1	441		1.14"D+.75"D	6'6" 6'4"	
Short End Diagonal	5	441		1.14" D+.75"D	5'8" 5'6"	
Bott. Chord Plate		A 36		.3125×1'3"	42'0"	

LACLEDE STEEL COMPANY D105- T 2 -Sheet 2

WORLD TRADE CENTER
FLOOR GRID TRUSSES
DESIGN DATA

TRUSS UNIT MARKED 2C32T2 Refer to drawings ST 101, 2, 4, 6, 7

Clearspan "L" = 59.08 ft. Spacing = 6.67 ft.

Applicable Total Moment = 5,630,000 inch pounds.

Based on 157 lbs./sq. ft. Total Load "w".

Applicable End Reaction = 31,300 pounds.

Based on 157 lbs./sq. ft. Total Load "w".

Applicable Total Constr. Moment = 1,860,000 inch pounds.

Based on 52 lbs./sq. ft. Construction Load.

Applicable Constr. End Reaction = 10,360 pounds.

Based on 52 lbs./sq. ft. Construction Load.

"V" Shear at End Panel = 28,150 pounds. ED = 3.0 ft.

WEB MEMBER #1 Distance from End Panel = 0.0 ft.

Applicable Shear V_x = 28,150 lbs. f_y = 50,000 psi

Slope = 2.65 f_s = 30,000 psi

ℓ = —— in. f_{sc} = —— psi

Reqd. Area = 2.77 sq. in. Use 2-1.14" DIA. + 2-0.75" DIA. Area = 2.92 sq. in.

WEB MEMBER #2 Distance from End Panel = 0.0 ft.

Applicable Shear V_x = 28,150 lbs. f_y = 50,000 psi

Slope = 1.00 f_s = —— psi

ℓ = 26.0 in. f_{sc} = 16,530 psi

Reqd. Area = 1.84 sq. in. Use 2-1.14" DIA. Area = 2.04 sq. in.

WEB MEMBER #3 Distance from End Panel = 4.87 ft.

Applicable Shear V_x = 23,050 lbs. f_y = 50,000 psi

Slope = 1.162 f_s = —— psi

ℓ = 30.0 in. f_{sc} = 13,490 psi

Reqd. Area = 1.99 sq. in. Use 2-1.14" DIA. Area = 2.04 sq. in.

WEB MEMBER #4 Distance from End Panel = 3.04 ft.

Applicable Shear V_x = 24,950 lbs. f_y = 50,000 psi

Slope = 1.162 f_s = — psi

ℓ = 30.0 in. f_{sc} = 13,490 psi

Reqd. Area = 2.15 sq. in. Use 2-1.14" DIA. + 2-0.75" DIA. Area = 2.92 sq. in.

WEB MEMBER #5 Distance from End Panel = 0.0 ft.

Applicable Shear V_x = 28,150 lbs. f_y = 50,000 psi

Slope = 2.20 f_s = 30,000 psi

ℓ = — in. f_{sc} = — psi

Reqd. Area = 2.06 sq. in. Use 2-1.14" DIA. + 2-0.75" DIA. Area = 2.92 sq. in.

CHORD MEMBER #6 Consists of 4 - 2" x 1½" x 0.31" Angles

Construction Load Design Area = 4.30 sq. in.

Applicable Moment = 1,860,000 in. lbs. f_y = 50,000 psi

ℓ = 33.375 in. f_s = — psi

r_x = 0.43 in. f_{sc} = 19,080 psi

r_z = 0.31 in. (with fillers in middle 60% of span)

$\frac{\ell}{r_x}$ = 77.6

$\frac{\ell}{2r_z}$ = 53.8 $\frac{f_a}{F_a} + \frac{f_b C_m}{F_b(1 - \frac{f_a}{F'_e})}$ = 0.859 less than 1

f_a = 15,400 psi

F_a = 19,080 psi

f_b = 770 psi

F_b = 30,000 psi

F'_e = 24,770 psi

Use 4- 2" x 1½" x 0.31" ∠'s Area = 4.30 sq. in.

CHORD MEMBER #7 Consists of 4-2" x 1½" x 0.31" ∠'s + 15 - 5/16" ø ~~Angles~~

Total Load Design Area = 8.99 (4.69 - 4.30) sq. in.

CHORD MEMBER #7 (CONTD.)

Applicable Moment = 5,630,000 in lbs. f_y = 36,000 psi

f_s = 22,000 psi

D_t = 33.31 in. f_{sc} = ——— psi

B_{eff} = 64.00 in.

t = 1.00 in. y_4 = 33.16 in.

y_1 = 2.00 in. d_4 = 21.67 in.

y_2 = 4.46 in. d_2 = 7.03 in.

y_3 = 32.54 in. d_3 = 21.05 in.

d_1 = 9.49 in. c_1 = 11.49 in.

c_2 = 21.82 in.

$$I_s = \sum [(I_c + A_c d_1^2) + (I_{TCA} + A_{TCA} d_2^2) + I_{BCA} + A_{BCA} d_3]$$

$$\bar{y} = \frac{\sum (A_c y_1 + A_{TCA} y_2 + A_{BCA} y_3)}{\sum (A_c + A_{TCA} + A_{BCA})}$$

$\bar{y}$ = 11.49 in.

I_s = 5,877 in.^{4} (2C32T2 + PLATE)

Resisting Moment = $f_s \times \frac{I_s}{c_2}$ = 5,920,000 in. lbs.

[illegible] area = 8.44 sq. in.

Composite Design Top Chord Check

Total Load Design f_c = 3,000 psi

Applicable Moment = 5,630,000 in. lbs. f'_c = 1,350 psi

$$f'_{cc} = \frac{M_{c1}}{15 I_s} = 733 \text{ psi}$$

CHORD MEMBER #8 Consists of 4 - 2" x 1½" x 0.31" Angles

Area = 4.30 sq. in.

(SAME AS MEMBER 6)

CHORD MEMBER #7 (CONTD.)

Applicable Moment = _____ in lbs. f_y = 36,000 psi

f_s = 22,000 psi

D_t = 33.00 in. f_{sc} = ____ psi

B_{eff} = 64.00 in.

t = 4.00 in. WITHOUT COVER PLATE

y_1 = 2.00 in. d_2 = 3.08 in.

y_2 = 4.46 in. c_3 = 25.00 in.

y_3 = 32.54 in. c_1 = 7.54 in.

d_1 = 5.54 in. c_2 = 25.46 in.

$$I_s = \sum [(I_c + A_c d_1^2) + (I_{TCA} + A_{TCA} d_2^2) + I_{BCA} + A_{BCA} d_3]$$

$$\bar{y} = \frac{\sum (A_c y_1 + A_{TCA} y_2 + A_{BCA} y_3)}{\sum (A_c + A_{TCA} + A_{BCA})}$$

$\bar{y}$ = 7.54 in.

I_s = 3,275 in.^{4} (C32T2)

Resisting Moment = $f_s \times \frac{I_s}{c_2}$ = 2,830,000 in. lbs.

Use 4 - 2"x1½"x0.31" T's Area = 4.30 sq. in.

Composite Design Top Chord Check

Total Load Design f_c = _____ psi

Applicable Moment = _____ in. lbs. f'_c = _____ psi

$$f'_{cc} = \frac{M_{c1}}{15 I_s} = \text{_____ psi}$$

CHORD MEMBER #8 Consists of _____ Angles

Area = _____ sq. in.

(SAME AS MEMBER 6)

LACLEDE STEEL COMPANY D105- T 3 -Sheet 1

WORLD TRADE CENTER
FLOOR GRID TRUSSES
DESIGN DATA

Truss Mk. 2C32T3 - 5811

Truss Component Mk. C32T3-5811

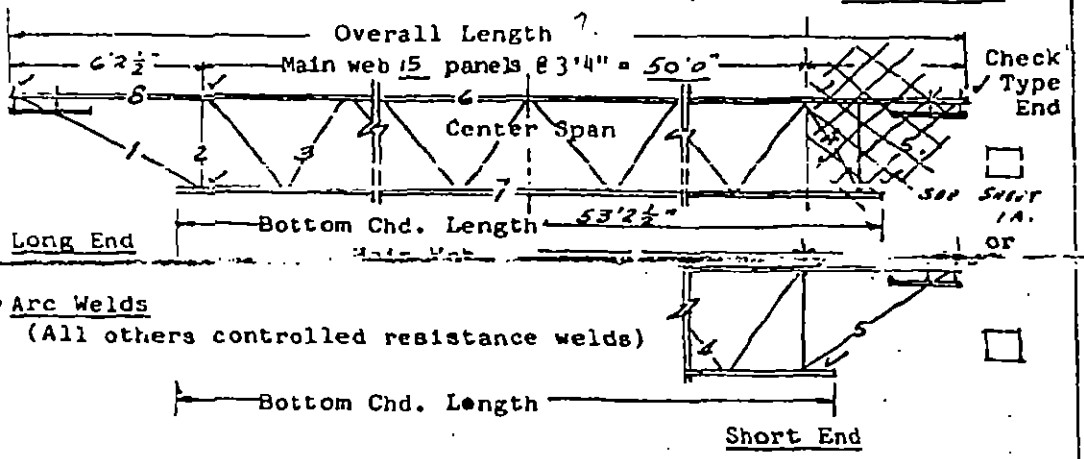

NOTES:

Main Web - Continuous uniform section throughout Member Mk. 3. (Top chord fillers same section as Main Web - at midpoint 10 center web panels minimum.)

Vertical Struts Mk. 2 - Same size as main web.

End Bearing Struts - Same size as main web.

Composite Type - Webs extend above top chord 3 ".

MEMBERS REQUIRED PER TRUSS COMPONENT S____ or C ✓

Member	Mk.No.	Grade of Steel		Size	Total Length Member	Weight Member
Top Chord	6-8	A 441	2L's	2x1½x.25	58'9"	
Bottom Chord	7	36	2L's	3x2x.33	53'2½"	
Main Web	3	36		1.09"D	9'6"	
Compression Web	4	441		1.14"D	3'1"	
Vertical End Struts	2	36		1.09"D	2:7'7½ 1 8'8½"	
Long End Diagonal	1	441		1.14"D	6'6"	
Short End Diagonal	5	441		1.14"D	2'6"	
Top Chd Att. Plates		A 36		⅜x5" (½/Truss)	9"	
Bot Chord Att. L's		36	2L's	2x1½x.25	1'3"	
" " L's		36	2L's	"	6"	

SPECIAL SECTIONS

(Extended, square ends, etc.)

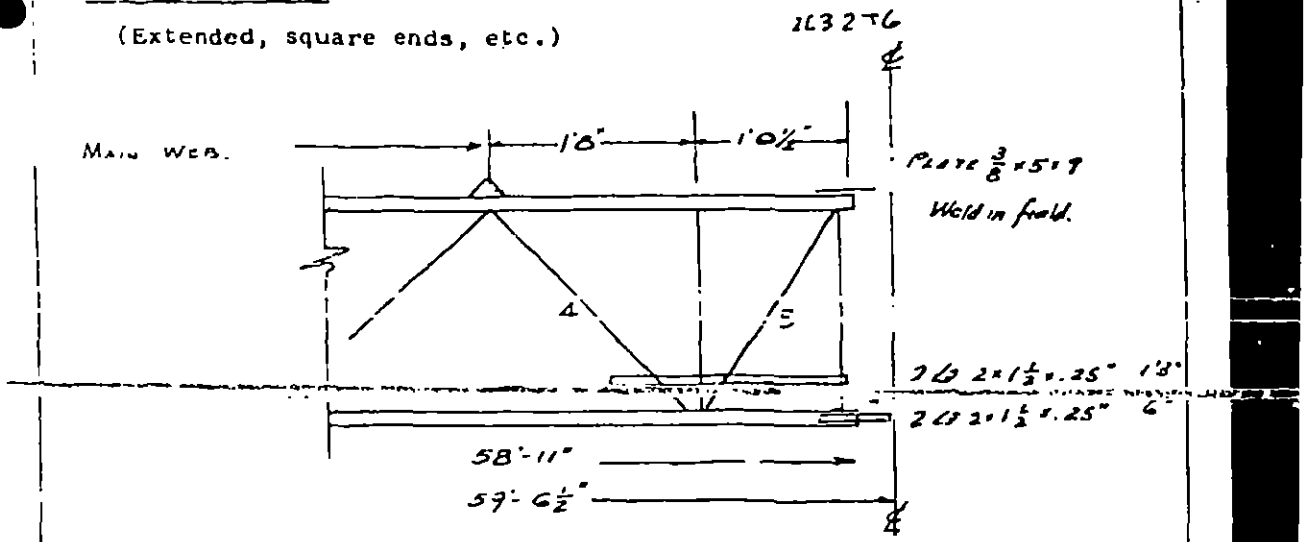

$$R = \frac{(6.67)(.121)(59.24)}{2} = 24.00\ K$$

$$V_s = 24.0 - \frac{14}{12}(.121)(6.67) = 23.06\ K$$

$$V_c = V_s - \frac{16}{12}(.121)(6.67) = 21.98\ K$$

LACLEDE STEEL COMPANY D105- T 3 -Sheet 2

WORLD TRADE CENTER
FLOOR GRID TRUSSES
DESIGN DATA

TRUSS UNIT MARKED 2C32T3 Refer to drawings ST 101, 2, 4, 6, 7.

Clearspan "L" = 59.08 ft. Spacing = 6.67 ft.

Applicable Total Moment = 4,275,000 inch pounds.

Based on 121 lbs./sq. ft. Total Load "w".

Applicable End Reaction = 24,000 pounds.

Based on 121 lbs./sq. ft. Total Load "w".

Applicable Total Center Moment = 1,015,200 inch pounds.

Based on 52 lbs./sq. ft. Construction Load.

Applicable Constr. End Reaction = 10,300 pounds.

Based on 52 lbs./sq. ft. Construction Load.

"V" Shear at End Panel = 21,580 pounds. ED = 3.0 ft.

WEB MEMBER #1 Distance from End Panel = 0.0 ft.

Applicable Shear V_x = 21,580 lbs. f_y = 50,000 psi

Slope = 2.65 f_s = 30,000 psi

ℓ = — in. f_{sc} = — psi

Reqd. Area = 1.91 sq. in. Use 2-1.14" DIA. Area = 2.04 sq. in.

WEB MEMBER #2 Distance from End Panel = 0.0 ft.

Applicable Shear V_x = 21,580 lbs. f_y = 36,000 psi

Slope = 1.00 f_s = — psi

ℓ = 25.5 in. f_{sc} = 13,510 psi

Reqd. Area = 1.59 sq. in. Use 2-1.09" DIA Area = 1.87 sq. in.

WEB MEMBER #3 Distance from End Panel = 4.87 ft.

Applicable Shear V_x = 17,650 lbs. f_y = 36,000 psi

Slope = 1.162 f_s = — psi

ℓ = 29.5 in. f_{sc} = 11,820 psi

Reqd. Area = 1.73 sq. in. Use 2-1.09" DIA. Area = 1.87 sq. in.

LACLEDE STEEL COMPANY D105- T 3 -Sheet 3

WEB MEMBER #4 Distance from End Panel = 2.50 ft. (ED = 0)

Applicable Shear V_x = 21,980 lbs. f_y = 50,000 psi

Slope = 1.162 f_s = — psi

l = 29.5 in. f_{sc} = 13,580 psi

Reqd. Area = 1.88 sq. in. Use 2 - 1.14" DIA. Area = 2.04 sq. in.

WEB MEMBER #5 Distance from End Panel = 1.17 ft. (ED = 0)

Applicable Shear V_x = 23,060 lbs. f_y = 50,000 psi

Slope = 1.06 f_s = 30,000 psi

l = — in. f_{sc} = — psi

Reqd. Area = 0.815 sq. in. Use 2 - 1.14" DIA. Area = 2.04 sq. in.

CHORD MEMBER #6 Consists of 4 - 2" x 1½" x 0.25" Angles

Construction Load Design Area = 3.60 sq. in.

Applicable Moment = 1,815,000 in. lbs. f_y = 50,000 psi

l = 33.375 in. f_s = — psi

r_x = 0.44 in. f_{sc} = 19,380 psi

r_z = 0.31 in. (with fillers in middle 60% of span)

$\frac{l}{r_x}$ = 75.8

$\frac{l}{2r_z}$ = 53.8

$\frac{f_a}{F_a} + \frac{f_b C_m}{F_b\left(1 - \frac{f_a}{F'_e}\right)}$ = 0.995 less than 1

f_a = 18,000 psi

F_a = 19,380 psi

f_b = 843 psi

F_b = 30,000 psi

F'_e = 25,950 psi

Use 4 - 2" x 1½" x 0.25" ✓ Area = 3.60 sq. in.

CHORD MEMBER #7 Consists of 4 - 3" x 2" x 0.33" Angles

Total Load Design Area = 6.62 sq. in.

CHORD MEMBER #7 (CONTD.)

Applicable Moment = 4,275,000 in lbs. f_y = 36,000 psi

f_s = 22,000 psi

D_t = 33.00 in. f_{sc} = —— psi

B_{eff} = 64.00 in.

t = 4.00 in.

y_1 = 2.00 in. d_2 = 5.25 in.

y_2 = 4.44 in. d_3 = 22.76 in.

y_3 = 22.15 in. c_1 = 7.69 in.

d_1 = 7.69 in. c_2 = 23.31 in.

$$I_s = \sum [(I_c + A_c d_1^2) + (I_{TCA} + A_{TCA} d_2^2) + I_{BCA} + A_{BCA} d_3]$$

$$\bar{y} = \frac{\sum (A_c y_1 + A_{TCA} y_2 + A_{BCA} y_3)}{\sum (A_c + A_{TCA} + A_{BCA})}$$

$\bar{y}$ = 9.69 in.

I_s = 4560 in.^{4} (2C32T3)

Resisting Moment = $f_s \times \frac{I_s}{c_2}$ = 1,312,000 in lbs

Use 4 - 3" x 2" x 0.33" 4's Area = 6.62 sq. in.

Composite Design Top Chord Check

Total Load Design f_c = 3,000 psi

Applicable Moment = 4,275,000 in. lbs. f'_c = 1,350 psi

$$f'_{cc} = \frac{Mc_1}{15 I_s} = 605 \text{ psi}$$

CHORD MEMBER #8 Consists of 4 - 2" x 1½" x 0.25" Angles

Area = 3.60 sq. in.

(SAME AS MEMBER 6)

LACLEDE STEEL COMPANY D105- T3A -Sheet 1

WORLD TRADE CENTER
FLOOR GRID TRUSSES
DESIGN DATA

Truss Mk. 2 C 32 T3A - 5811

Truss Component Mk. C 32 T3A

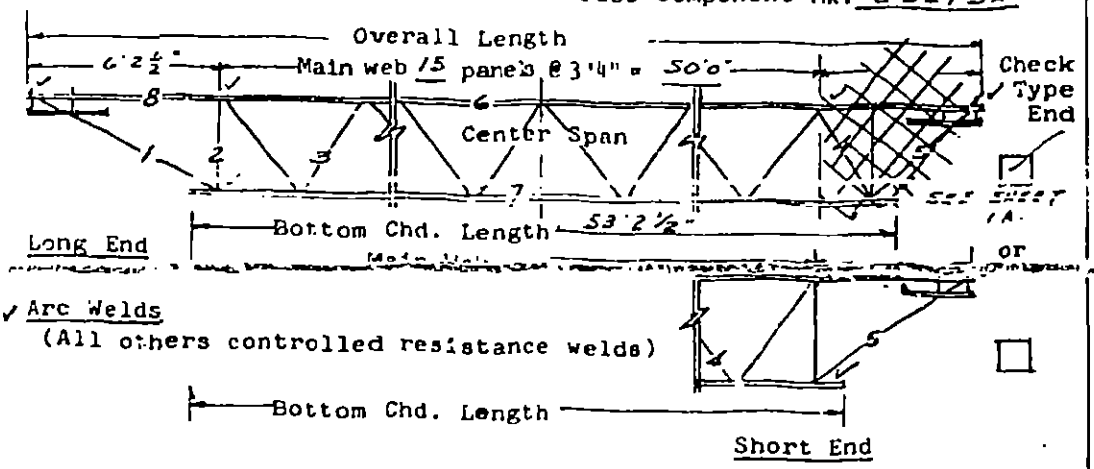

NOTES:

Main Web - Continuous uniform section throughout Member Mk. 3. (Top chord fillers same section as Main Web - at midpoint 10 center web panels minimum.)

Vertical Struts Mk. 2 - Same size as main web.

End Bearing Struts - Same size as main web.

Composite Type - Webs extend above top chord 3".

MEMBERS REQUIRED PER TRUSS COMPONENT S____ or C ✓

Member	Mk.No.	Grade of Steel		Size	Total Length Member	Weight Member
Top Chord	6-8	A 441	2Ls	2 x 1½ x .25	58'11"	
Bottom Chord	7	36	2Ls	2 x 1½ x .25	53'2½"	
Main Web	3	36		.92" D	91'6"	
Compression Web	4	441		.98" D	3'1"	
Vertical End Struts	2	36		.92" D	2-2'7½", 2-2'3½"	
Long End Diagonal	1	441		.98" D	6'6"	
Short End Diagonal	5	441		.98" D	2'6"	
Top Chd. Att Plate		A 36		⅜ x 5 (½/truss)	9"	
Bott Chd Att L		36	2Ls	2 x 1½ x .25"	1'3"	
" " " L		36	2Ls	2 x 1½ x .25"	6"	

SPECIAL SECTIONS

Extended, square ends, etc.)

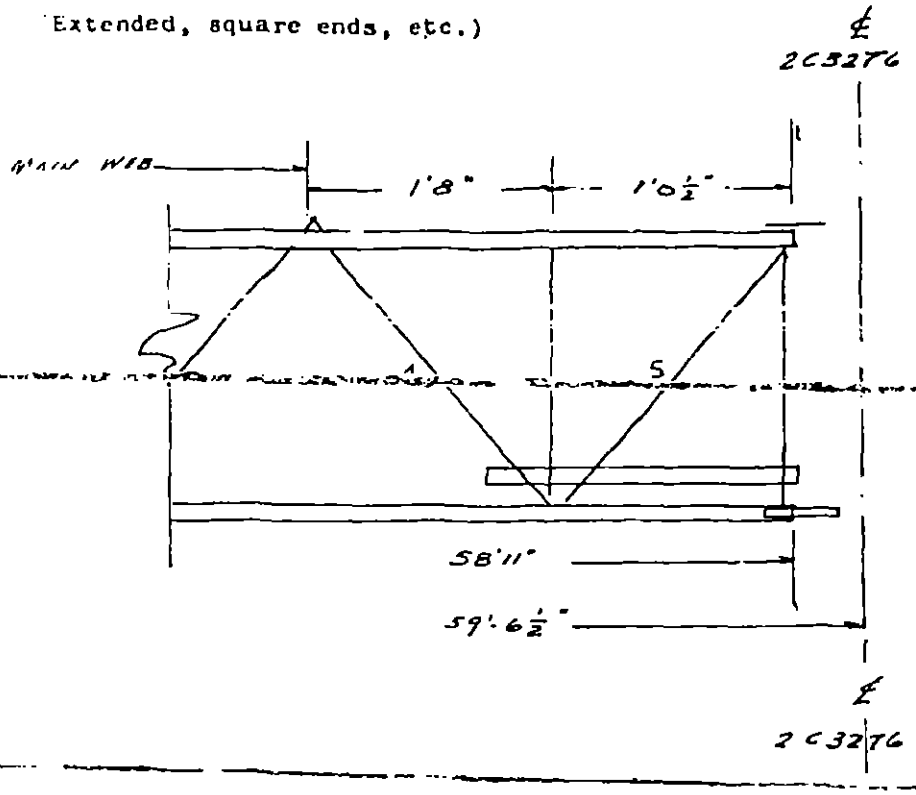

LACLEDE STEEL COMPANY D105- T3A -Sheet 2

WORLD TRADE CENTER
FLOOR GRID TRUSSES
DESIGN DATA

TRUSS UNIT MARKED 2C32T3A Refer to drawings ST 101, 2, 4, 6, 7.

Clearspan "L" = 59.08 ft. Spacing = 6.67 ft.

Applicable Total Moment = 1,855,000 inch pounds.

Based on — lbs./sq. ft. Total Load "w".

Applicable End Reaction = 14,000 pounds.

Based on 71 lbs./sq. ft. Total Load "w".

Total Center Moment = 1,015,000 inch pounds.

Based on 52 lbs./sq. ft. Construction Load.

Applicable Constr. End Reaction = 10,300 pounds.

Based on 52 lbs./sq. ft. Construction Load.

"V" Shear at End Panel = 12,580 pounds. ED = 3.0 ft.

WEB MEMBER #1 Distance from End Panel = 0.0 ft.

Applicable Shear V_x = 12,580 lbs. f_y = 50,000 psi

Slope = 2.65 f_s = 30,000 psi

l = — in. f_{sc} = — psi

Reqd. Area = 1.11 sq. in. Use 2-0.92" DIA. Area = 1.33 sq. in.

WEB MEMBER #2 Distance from End Panel = 0.0 ft.

Applicable Shear V_x = 12,580 lbs. f_y = 36,000 psi

Slope = 1.00 f_s = — psi

l = 26.0 in. f_{sc} = 11,200 psi

Reqd. Area = 1.12 sq. in. Use 2-0.92" DIA. Area = 1.33 sq. in.

WEB MEMBER #3 Distance from End Panel = 4.87 ft.

Applicable Shear V_x = 10,270 lbs. f_y = 36,000 psi

Slope = 1.162 f_s = — psi

l = 30.0 in. f_{sc} = 8,750 psi

Reqd. Area = 1.36 sq. in. Use 2-0.92" DIA. Area = 1.33 sq. in.

LACLEDE STEEL COMPANY D105- T3A -Sheet 3

WEB MEMBER #4 Distance from End Panel = 2 5 0 ft.

Applicable Shear V_x = 12,820 lbs. f_y = 50,000 psi

Slope = 1.162 f_s = — psi

ℓ = 30.0 in. f_{sc} = 9,970 psi

Reqd. Area = 1.50 sq. in. Use 2-0.98" D. Area = 1.51 sq. in.

WEB MEMBER #5 Distance from End Panel = 1.17 ft. 60 x 0

Applicable Shear V_x = 13,450 lbs. f_y = 50,000 psi

Slope = 1.04 f_s = 30,000 psi

ℓ = f_{sc} = psi

Reqd. Area = 0.447 sq. in. Use 2 0.98" D. Area = 1.51 sq. in.

CHORD MEMBER #6 Consists of 4 L 2"x1½"x.25" Angles

Construction Load Design Area = 3.60 sq. in.

Applicable Moment = 1,815,000 in. lbs. f_y = 50,000 psi

ℓ = 33.375 in. f_s = — psi

r_x = 0.44 in. f_{sc} = 19,380 psi

r_z = 0.31 in. (with fillets in middle 60% of span)

$\frac{\ell}{r_x}$ = 75.8

$\frac{\ell}{2r_z}$ = 53.8 $\frac{f_a}{F_a} + \frac{f_b C_m}{F_b(1-\frac{f_a}{F'_e})}$ = 0.995 less than 1

f_a = 18,000 psi

F_a = 19,380 psi

f_b = 843 psi

F_b = 30,000 psi

F'_e = 25,950 psi

Use 4 L 2"x1½"x.25" Area = 3.60 sq. in.

CHORD MEMBER #7 Consists of 4 L 2"x1½"x.25" Angles

Total Load Design Area = 3.60 sq. in.

CHORD MEMBER #7 (CONTD.)

Applicable Moment = 1,855,000 in lbs. f_y = 50,000 psi

f_s = 30,000 psi

D_t = 33.00 in. f_{sc} = ——— psi

B_{eff} = 64.00 in.

t = 4.00 in.

y_1 = 2.00 in. d_2 = 2.46 in.

y_2 = 4.44 in. d_3 = 25.66 in.

y_3 = 32.56 in. c_1 = 6.90 in.

a_1 = 4.70 in. c_2 = 26.10 in.

$$I_s = \sum [(I_c + A_c d_1^2) + (I_{TCA} + A_{TCA} d_2^2) + I_{BCA} + A_{BCA} d_3]$$

$$\bar{y} = \frac{\sum (A_c y_1 + A_{TCA} y_2 + A_{BCA} y_3)}{\sum (A_c + A_{TCA} + A_{BCA})}$$

$\bar{y}$ = 6.90 in.

I_s = 2826 $in.^4$ (2C32T3A)

Resisting Moment = $f_s \frac{I_s}{c}$ = 2,300,000 in. lbs.

Use 4-2"x 1½"x 0.25" ℓ's Area = 3.60 sq. in.

Composite Design Top Chord Check

Total Load Design f_c = 3,000 psi

Applicable Moment = 1,855,000 in. lbs. f'_c = 1,350 psi

$$f'_{cc} = \frac{Mc_1}{15I_s} = 302 \text{ psi}$$

CHORD MEMBER #8 Consists of 4-2"x 1½"x 0.25" Angles

Area = 3.60 sq. in.

(SAME AS MEMBER 6)

LACLEDE STEEL COMPANY D105- T 4 -Sheet 1

WORLD TRADE CENTER FLOOR GRID TRUSSES DESIGN DATA

Truss Mk. C 32 T4-5811

Truss Component Mk. C32T4

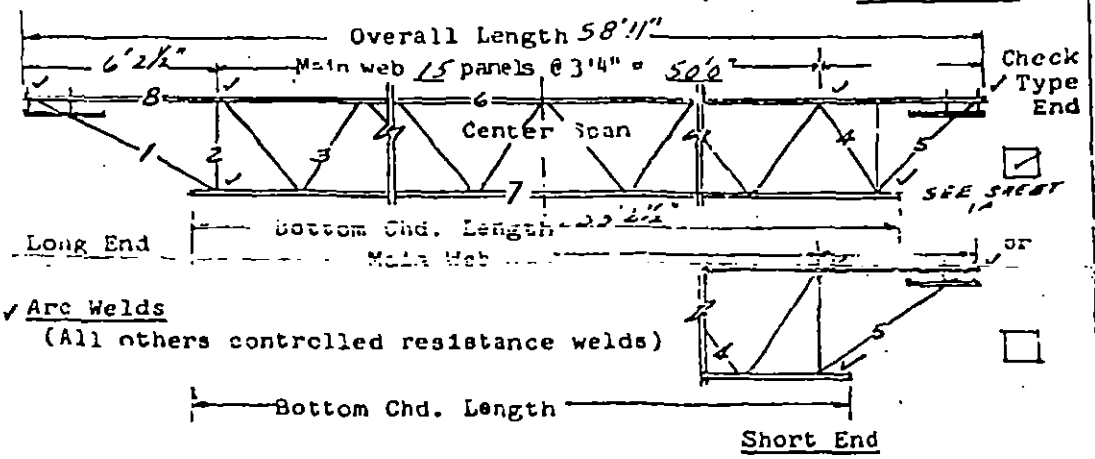

NOTES:

Main Web - Continuous uniform section throughout Member Mk. 3. (Top chord fillers same section as Main Web - at midpoint ____ center web panels minimum.)

Vertical Struts Mk. 2 - Same size as main web.

End Bearing Struts - Same size as main web.

Composite Type - Webs extend above top chord 3 ".

MEMBERS REQUIRED PER TRUSS COMPONENT S____ or C ✓

Member	Mk.No.	Grade of Steel	Size	Total Length Member	Weight Member
Top Chord	6-8	A-441	2 L 2"x1½"x.25"	58'11"	
Bottom Chord	7	A-36	2 L 2"x1½"x.25"	53'2½"	
Main Web	3	A-441	.98" D	91'6"	
Compression Web	4	A-441	.98" D	3'1"	
Vertical End Struts	2	A-36	.98" D	2-2'7½" 2-2'3½"	
Long End Diagonal	1	A-441	.92" D	6'6"	
Short End Diagonal	5	A-36	.92" D	3'6"	
Top Chord Att. Plate		A-36	3/8"x5"	4½"	
Bottom Chord Att. L's		A-36	2 L 2"x1½"x.25"	6"	

SPECIAL SECTIONS

(Extended, square ends, etc.)

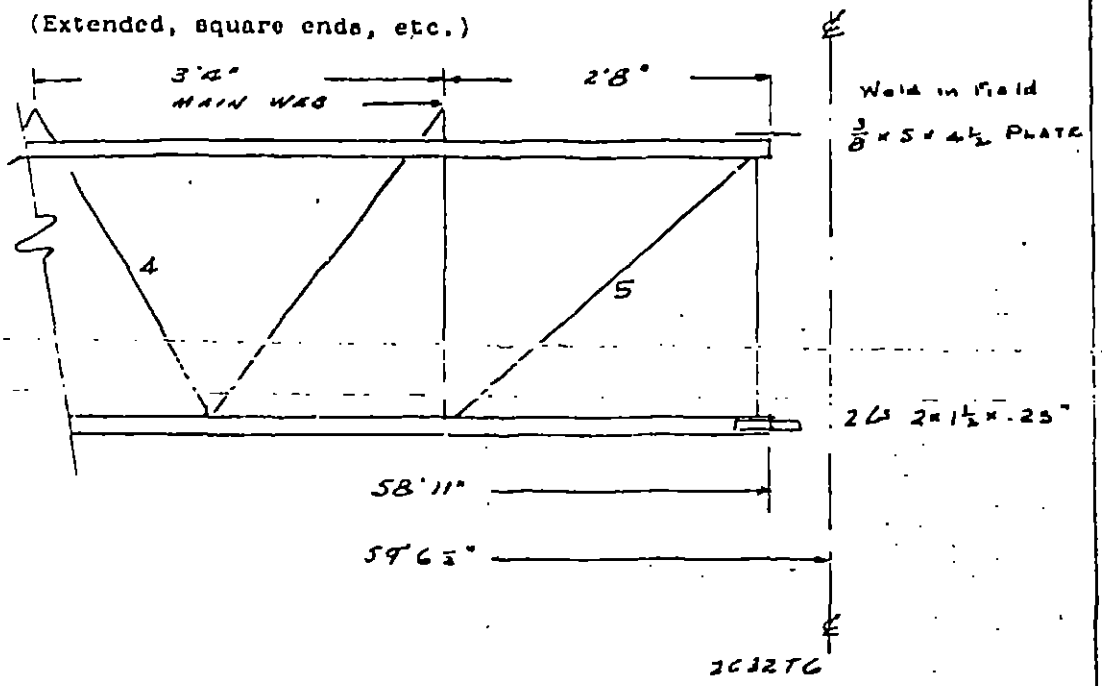

$R = 8.00\ K$

$V_5 = \frac{[illegible]}{12}(.272) = [illegible]$

$V_4 = V_5 = \frac{36}{12}(.272) = 6.529\ K$

LACLEDE STEEL COMPANY D105- T4 -Sheet 2

WORLD TRADE CENTER
FLOOR GRID TRUSSES
DESIGN DATA

TRUSS UNIT MARKED C32T4 Refer to drawings ST 101.2.4.6.7

Clearspan "L" = 59.08 ft. Spacing = 6.67 ft.

Applicable Total Moment = 500,000 inch pounds.

Based on — lbs./sq. ft. Total Load "w".

Applicable End Reaction = 8000 pounds.

Based on ____ lbs./sq. ft. Total Load "W".

Applicable Total Constr. Moment = ____ inch pounds.

Based on ____ lbs./sq. ft. Construction Load.

Applicable Constr. End Reaction = ____ pounds.

Based on ____ lbs./sq. ft. Construction Load.

"V" Shear at End Panel = 7,114 pounds. ED = 3.0 ft.

WEB MEMBER #1 Distance from End Panel = 0.0 ft.

Applicable Shear V_x = 7,184 lbs. f_y = 50,000 psi

Slope = 2.65 f_s = 30,000 psi

ℓ = — in. f_{sc} = ____ psi

Reqd. Area = .655 sq. in. Use .72"D Area = .667 sq. in.

WEB MEMBER #2 Distance from End Panel = 0.0 ft.

Applicable Shear V_x = 7,184 lbs. f_y = 36,000 psi

Slope = 1.00 f_s = — psi

ℓ = 26.0 in. f_{sc} = 11,300 psi

Reqd. Area = .64 sq. in. Use .92"D Area = .667 sq. in.

WEB MEMBER #3 Distance from End Panel = 4.87 ft.

Applicable Shear V_x = 5,860 lbs. f_y = 50,000 psi

Slope = 1.162 f_s = ____ psi

ℓ = 30.0 in. f_{sc} = 9,974 psi

Reqd. Area = .683 sq. in. Use .98"D Area = .755 sq. in.

WEB MEMBER #4 Distance from End Panel = 5.00 ft. Edge

Applicable Shear V_x = 6,529 lbs. f_y = 50,000 psi

Slope = 1.162 f_s = _____ psi

ℓ = 300 in. f_{sc} = 9,970 psi

Reqd. Area = .762 sq. in. Use 98"D Area = .755 sq. in.

WEB MEMBER #5 Distance from End Panel = 7.00 ft.

Applicable Shear V_x = 7,456 lbs. f_y = 36,000 psi

Slope = 1.50 f_s = 22,000 psi

ℓ = 420 in f_{sc} = _____ psi

Reqd. Area = .509 sq. in. Use .92"D Area = .667 sq. in.

CHORD MEMBER #6 Consists of 2 L's 2 x 1½ x .25" Angles

Construction Load Design Area = 1.80 sq. in.

Applicable Moment = _____ in. lbs. f_y = _____ psi

ℓ = _____ in. f_s = _____ psi

r_x = _____ in. f_{sc} = _____ psi

r_z = _____ in. (with fillers in middle 60% of span)

$\frac{\ell}{r_x}$ = _____

$\frac{\ell}{2r_z}$ = _____ $\frac{f_a}{F_a} + \frac{f_b C_m}{F_b\left(1 - \frac{f_a}{F'_e}\right)}$ = _____ less than 1

f_a = _____ psi

F_a = _____ psi

f_b = _____ psi

F_b = _____ psi

F'_e = _____ psi

Use _____ Area = _____ sq. in.

CHORD MEMBER #7 Consists of 2 L's 2 x 1½ x .25" Angles

Total Load Design Area = 1.80 sq. in.

CHORD MEMBER #7 (CONTD.)

Applicable Moment = 500,000 in lbs. f_y = 36000 psi

f_s = 22000 psi

D_t = 33.375 in. f_{sc} = _____ psi

B_{eff} = 64.0 in.

t = 4.0 in.

y_1 =	2.0 in.	d_2 =	.43 in.
y_2 =	4.44 in.	d_3 =	27.69 in.
y_3 =	32.56 in.	c_1 =	4.87 in.
d_1 =	2.87 in.	c_2 =	28.13 in.

$$I_s = \sum [(I_c + A_c d_1^2) + (I_{TCA} + A_{TCA} d_2^2) + I_{BCA} + A_{BCA} d_3^2]$$

$$\bar{y} = \frac{\sum (A_c y_1 + A_{TCA} y_2 + A_{BCA} y_3)}{\sum (A_c + A_{TCA} + A_{BCA})}$$

$\bar{y}$ = 4.87 in.

I_s = 1540 in.^{4} (C3274)

Resisting Moment = $f_s \times \frac{I_s}{c_2}$ = 1,205,000 in. lbs.

Use 2L's 2 x 1½ x .25" Area = 1.80 sq. in.

Composite Design Top Chord Check

Total Load Design f_c = 3,000 psi

Applicable Moment = 500,000 in. lbs. f'_c = 1,350 psi

$$f'_{cc} = \frac{Mc_1}{15I_s} = 105 \text{ psi}$$

CHORD MEMBER #8 Consists of 2L's 2 x 1½ x .25" Angles

Area = 1.80 sq. in.

(SAME AS MEMBER 6)

Re ED 3-15-67

LACLEDE STEEL COMPANY D105- 5 Sheet 1

WORLD TRADE CENTER
FLOOR GRID TRUSSES
DESIGN DATA

Truss Mk. 2C32T5-358

Truss Component Mk. C32T5-358

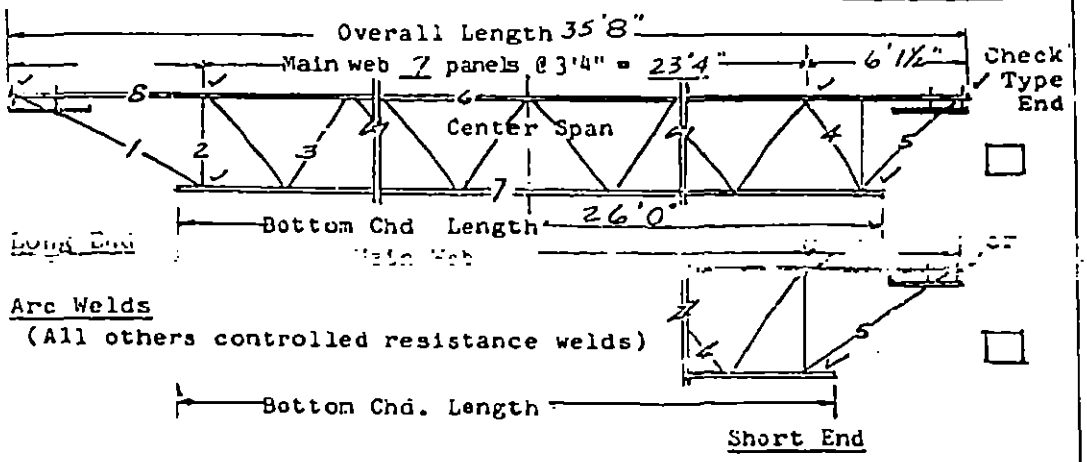

NOTES:

Main Web - Continuous uniform section throughout Member Mk. 3. (Top chord fillers same section as Main Web - at midpoint center web panels minimum.) NONE

Vertical Struts Mk. 2 - Same size as main web.

End Bearing Struts - Same size as main web.

Composite Type - Webs extend above top chord 3".

MEMBERS REQUIRED PER TRUSS COMPONENT S____ or C ✓

Member	Mk. No.	Grade of Steel	Size	Total Length Member	Weight Member
Top Chord	6-8	A-441	2-2" x 1½" x 0.25" ♭		
Bottom Chord	7	A-36	2-2" x 1½" x 0.25" ♭		
Main Web	3	A-36	0.92" DIA.		
Compression Web	4	A-441	0.98" DIA.		
Vertical End Struts	2	A-36	0.92" DIA.		
Long End Diagonal	1	A-441	0.92" DIA.		
Short End Diagonal	5	A-441	0.92" DIA.		

SPECIAL SECTIONS

(Extended, square ends, etc.)